HOME

AEROSTAR CONTINUED AIRWORTHINESS INSTRUCTIONS

FOR

AEROSTAR (RAVEN) HOT AIR BALLOONS

ACAI
PART I

Type Certificate No. A15CE

Date: December 23, 1981

Reissued: November 15, 1999

Revision D: September 15, 2003

AEROSTAR INTERNATIONAL, INC.
P.O. Box 5057
Sioux Falls SD 57117

NOTE

February 1, 1986, Raven Industries subdivided the Hot Air Balloon manufacturing of the Applied Technology Division. Aerostar International, Inc. was formed at that time and performs all balloon manufacturing. This manual (Part I) provides approved procedures for preventative maintenance, airworthiness limitations and inspection after a hard landing for Aerostar and Raven Hot Air Balloon Systems.

In accordance with FAR 43.13a, and as specified in the “Maintenance and Inspection” section of Aerostar (Raven) Type Certificate Data Sheet **TC A15CE**, paragraph F, it is required that all persons performing maintenance, alteration, inspection, or preventive maintenance use the most current instructions from Aerostar for the performance of those actions. Regardless of the utilization of Aerostar or Raven Hot Air Balloon systems it is mandatory that the aircraft receive an annual inspection and a 100-hour inspection if it has not had an annual inspection during the most current 100 hours of operation. Both owner and repairman should have a full understanding of proper repair and test procedures approved by Aerostar. This manual is a complete reissue of all previous RIFCA and ACAI manuals issued by Raven/Aerostar. ACAI Part II deals with maintenance, repairs, inspections and endorsements required by FAA authorized personnel.

When an Aerostar envelope is mated with a Balloon Works, Cameron or Thunder/Colt basket-burner-fuel system under one of the applicable STC's held by Aerostar, the various components must be serviced, maintained and inspected in accordance with EACH manufacturer's most current instructions for continued airworthiness, as appropriate. This includes preventative maintenance, airworthiness limitations, maintenance, alterations, inspections, and repairs.

WARNING

Improper test methods and repair methods will cause the balloon to become unairworthy. The person performing the tests and repairs is thereafter responsible in the event of any investigation. Make sure repairs are done properly by authorized personnel only.

CAUTION

IN FAR 91.403, THE FAA HAS PLACED THE BURDEN OF RESPONSIBILITY "FOR MAINTAINING THAT AIRCRAFT IN AN AIRWORTHY CONDITION" ON THE OWNER/OPERATOR. IT IS THAT INDIVIDUAL'S RESPONSIBILITY TO ENSURE THAT THE MAINTENANCE AND INSPECTION PERSONNEL EMPLOYED TO PERFORM NECESSARY UP KEEP ARE PROPERLY TRAINED, EQUIPPED AND AUTHORIZED. IF YOU HAVE QUESTIONS AS TO THEIR QUALIFICATIONS, CONTACT YOUR NEAREST FAA OFFICE.

Copyright © 1986, 1999 by Aerostar Intl., Inc.

Reproductions of this manual or any part of it may be made only with the EXPRESSED WRITTEN permission from AEROSTAR International, Inc.

TABLE OF CONTENTS

	Page
Section 1.0 - INTRODUCTION	1-1
1.1 Envelope	1-3
1.2 Burner and Fuel System	1-13
1.3 Basket	1-20
Section 2.0 - PREVENTATIVE MAINTENANCE	2-1
2.1 Envelope	2-3
2.2 Temperature Indicator	2-8
2.3 Burner	2-9
2.4 Basket	2-10
2.5 Storage	2-11
Section 3.0 - AIRWORTHINESS LIMITATIONS	3-1
FAA Approval & Revisions Page	3-2
Chart 301 Envelope Limitations	3-3
Chart 302 Burner Assemblies Limitations	3-8
Chart 303 Fuel Systems Limitations	3-10
Chart 304 Gondola Limitations	3-12
Section 4.0 - INSPECTION AFTER A HARD LANDING	4-1
4.1 Envelope	4-1
4.2 Burner and Fuel System	4-2
4.3 Basket	4-2
Appendix I-A, Sample Log Book Entries	A-1
Preventive Maintenance	A-1
Airworthiness Limitations	A-1
Hard Landing Inspection	A-1
Hose Inspection/Replacement	A-1
Service Bulletin Compliance	A-2
Appendix I-B	B-1
Service Bulletins	B-1
Airworthiness Directives	B-4
Service Letters	B-5

I L L U S T R A T I O N S

Illustration	Description	Page
Figure 1.1.0	Fabric Orientation	1-3
Figure 1.1.1	Rip Top Envelope Design	1-4
Figure 1.1.2	Parachute Top Envelope Design	1-5
Figure 1.1.3	Pulley Parachute Envelope Design	1-6
Figure 1.1.4	Aerochute Envelope Design	1-7
Figure 1.1.5	Spring Top™ Envelope Design	1-8
Figure 1.1.6	Spring/Pocket Interface	1-9
Figure 1.1.7	Para-Rip Top Envelope Design	1-10
Figure 1.1.8	Rotator Vent - Single	1-11
Figure 1.1.9	Rotator Vent - Dual	1-12
Figure 1.2.1	Fuel Tanks (10 gal & 15/18 gal)	1-14
Figure 1.2.2	Fuel Tanks (20/25 gal & 23 gal)	1-15
Figure 1.2.3	HPII Single and Dual Burners	1-16
Figure 1.2.4	HPIII Single and Dual Burners	1-17
Figure 1.2.5	HPIII Single Aurora	1-18
Figure 1.2.6	HPIII Triple Burner	1-18
Figure 1.3.1	Aerostar Baskets (ELS & RWS)	1-21
Figure 1.3.2	Aerostar Baskets (RWSW & CW)	1-22
Figure 1.3.3	Aerostar Baskets (CWS & RB5)	1-23
Figure 1.3.4	Aerostar Baskets (RB6 & RB8)	1-24
Figure 1.3.5	Aerostar Baskets (TW1 & Promo.)	1-25
Figure 1.3.6	Aerostar Baskets (Rally II & Classic X)	1-26
Figure 1.3.7	Aerostar Baskets (ELSS & RB12)	1-27

ILLUSTRATIONS
(continued)

Figure 1.3.8 Aerostar Baskets (CW-AFX, RWSW-AFX) 1-28

Figure 2.1 (9) Skirt Repair Sewing Details 2-8

Figure 2.3 Adjustment of Piezo Electrode 2-9

REVISION LOG

Rev.Ltr.	Paragraphs	Pages	Approved By	Date
Orig.	Reissue	All pages	Mark L. West, President	11/15/99
Revision A	NOTE re-worded	i	Mark L. West, President	February 15, 2001
	Changed Section 3.0 contents	ii		
	Figure 1.3.2 corrected	iii		
	Added Figure 2.1 (9)	iv		
	Revision Log, Revision A list	v		
	Introduction 1.0 Added models S64A, CELL, GSP envelopes	1-1		
	Re-worded paragraphs 2 and 3	1-2		
	2.0 Item (4) reworded	2-1		
	(5) corrected	2-2		
	Added item (9) skirt repair procedures	2-7 & 2-8		
	Re-wrote Airworthiness Limitations Section	3-1 through 3-33		
	Removed “or”	4-1		
	“for” to “from”	4-2		
	Changed rattan tolerances	4-3		
	“200X” to” 20XX”	A-1		
	added “	A-2		
	Corrected Spacing	B-3		
	Added Service Bulletin # SB-136	B-4		
	Added Service Letter #113	B-5		
Revision B	Introduction Revision Log Section 3.0 Revision Log Chart 301 Figure 5.1.c (note)	V 3-1 3-3 3-9	Mark L. West President	March 01, 2001
Revision C	Cover Page : revision C	cover page	Mark L. West, President	December 07, 2001
	Table of Contents	ii		
	Revision Log	v		
	1.0 Introduction, added to applicability statement, added model “BRAIN”	1-1		
	1.0 Introduction: changed contact Information	1-2		
	Change to Appendix II-A	2-5		
	Section 3.0 Airworthiness Limitations Complete	3-1 through 3-17		

REVISION LOG (continued)

Rev.Ltr.	Paragraphs	Pages	Approved By	Date
Revision D	Cover Page; revision D.	Cover page	Mark L. West, President	Sept. 15, 2003
	New page.	vi		
	1.0 Added S53H, S57H, S60H, House.	1-1		
	1.1 Added paragraph for fabric orientation.	1-3		
	Removed 10 gal. tank depiction, added 23 gal tank to vertical single service tank.	1-14		
	Removed 23 gal single service tank.	1-15		
	Added retainer hasp to figure 1.2.5.	1-18		
	Revised alternate fabric chart. Changed “new patch” to “damage” in note.	2-4		
	Changed “new patch” to “damage” in two notes.	2-5		
	Added Service Bulletin 137.	B-4		

1.0 INTRODUCTION

As required by Type Certificate No. A15CE, originally issued 10 December 1968, this manual contains the instructions for maintenance and inspections that can be performed by the pilot/owner/operator/certified mechanics/ certified repairman, and are essential for the continued airworthiness of AEROSTAR (Raven) hot air balloons.

This manual applies to all models of manned hot air balloons manufactured by AEROSTAR (Raven). This manual applies to balloons and components certified in an experimental category as well as all models of AEROSTAR (Raven) hot air balloons and components certified under the FAA type certificate A15CE listed below. This manual is also applicable to any model of hot air balloon envelope or component added to the Aerostar Type Certificate (A15CE) after the date of the current revision.

S-40A Envelope	P/N 06275
S-49A Envelope	P/N 52049
S-50A Envelope	P/N 05957
S-51A Envelope	P/N 53151
S-52A Envelope	P/N 52052
S-53A Envelope	P/N 52801
S-53H Envelope	P/N 53228
S-55A Envelope	P/N 11813 or P/N 51231
S-57A Envelope	P/N 52057
S-57S Envelope	P/N 52579
S-57H Envelope	P/N 53249
S-60A Envelope	P/N 10428 or P/N 52024
S-60S Envelope	P/N 52589
S-60H Envelope	P/N 53244
S-64A Envelope	P/N 53098
S-66A Envelope	P/N 17653
S-71A Envelope	P/N 52071
S-77A Envelope	P/N 51502
S-81A Envelope	P/N 52917
RX-6 Envelope	P/N 12600
RX-7 Envelope	P/N 17312
RX-8 Envelope	P/N 52088
RXS-8 Envelope	P/N 52788
RX-9 Envelope	P/N 52799
78C Envelope	P/N 51989
90C Envelope	P/N 51990
CTS Envelope	P/N 52393
QUBE-80 Envelope	P/N 52496
110P Envelope	P/N 52751
SPI Envelope	P/N 52800
SPII Envelope	P/N 52752
SPIII Envelope	P/N 53000
ARKY Envelope	P/N 52907
BAG Envelope	P/N 53004
BRUT Envelope	P/N 53033
BUNY Envelope	P/N 53001
COOK Envelope	P/N 53003

W100LB Envelope	P/N 51072
PCORN Envelope	P/N 53069
CAKE Envelope	P/N 53171
SUN Envelope	P/N 53169
DAISY Envelope	P/N 53174
BEAR Envelope	P/N 53180
CELL Envelope	P/N 53205
GSP Envelope	P/N 53207
BRAIN Envelope	P/N 53217
HOUSE Envelope	P/N 53227
Rally Wicker, RW, Basket	P/N 14530
Classic Limited, CW, Basket	P/N 13860
Classic Custom Basket, CWV	P/N 15325
Classic Stretch Basket CWS	P/N 51620
Classic X Basket, TW-1, TW-2	P/N 51076-1,2
Classic VII, RB-5	P/N 52805
Classic IX, RB6, Basket	P/N 52430
Classic X, RB8, Basket	P/N 52428
Classic XII, RB12, Basket	P/N 52428-02
Classic Basket	P/N 52131
Classic II Basket	P/N 53030
Classic AFX Basket	P/N 53160
Classic II AFX Basket	P/N 53130
Aurora Basket ELS	P/N 52240
Aurora Stretch Basket, ELSS	P/N 53095
G Series Basket (aluminum)	P/N 13843
H.P. II Rally Burner Assy.	P/N 17399
H.P. II Single Burner Assy.	P/N 17398
H.P. II Dual Burner Assy.	P/N 17395
H.P. II Convertible Burner Assy.	P/N 17400
Rally Dual Inlet Burner Assy.	P/N 51464
H.P. III Single Burner Assy.	P/N 52370
H.P. III Dual Burner Assy.	P/N 52350
H.P. III Aurora Burner Assy.	P/N 52370
H.P. III Triple Burner Assy.	P/N 52950

Envelope model and serial numbers are located on the envelope load suspension fitting or on a serial no. tag attached to one of the envelope base termination fittings. Except for the Model G-Series, basket model and serial numbers are stamped on one of the lower frame tubes beneath the floor. Model G-Series baskets have the model and serial number stamped on the square, aluminum perimeter tubing. Earlier model baskets may have the model and serial number stamped on the basket load fitting located on top of the support tubes. Burner model and serial numbers are stamped on the burner frame.

For AEROSTAR (Raven) hot air balloon components that are not listed above, Raven Hot Air Balloon Maintenance Manual, Revision "L" or earlier should be used.

Unless otherwise stated, Aerostar Continued Airworthiness Instructions are applicable for all AEROSTAR (Raven) hot air balloon components listed on previous page.

When maintenance and/or repairs are required, it is essential that only materials approved by AEROSTAR International, Inc. and by the Federal Aviation Administration via Type Certificate A15CE, be used by authorized personnel.

If maintenance repairs for an unusual situation are encountered, consult the factory for guidance in the repair procedure before completing the work.

The following personnel at AEROSTAR International, Inc. can be contacted pertaining to repair and maintenance procedures:

Customer Service
or
Engineering Services

Aerostar International, Inc.
1814 “F” Avenue
Sioux Falls, SD 57104
(605) 331-3500

1.1 ENVELOPE

The envelope serves to contain the hot air that provides the lift required for flight. Using applicable safety factors, the envelope is designed to sustain the required loads. With the use of galvanized or stainless steel aircraft cable or Kevlar cable, basket load is transferred to the vertical envelope load webbings. The vertical load webbings then support the load. They are continuous to the top center of the balloon where they are sewn to an apex ring.

The envelope is designed to keep circumferential fabric stress to a minimum. Circumferential load webbings are used to contain circumferential stress that may occur during abnormal operating conditions such as severe wind shears or rapid ascents. Vertical and circumferential load webbings also serve as fabric rip stoppers.

The standard Aerostar envelope fabric is coated rip stop nylon. The coated side of the fabric is on the inside of the balloon. If repairs require fabric replacement, it is important to be able to identify the coated side. Use a felt tip marker to mark each side of the fabric. The edges of the mark will be a straight line on the coated side, but will bleed away from the mark on the uncoated side. The coated side may also feel more tacky or sticky to the touch.

The standard orientation of the fabric in most models is with the warp (machine) direction running the length of the gore. On models S-51A and S-53A, the equator gores are orientated with the warp direction running across the gore except with Aerolite fabric. Horizon models are constructed entirely of panels orientated with the direction of the warp running across the gore.

Optional fabrics used are AeroMax™ a heavier silicone coated diamond weave rip stop nylon and AeroLite™ a lighter silicone coated diamond weave rip stop nylon.

Deflation systems are of either the circular Rip Top, Spring Top™, Parachute Top, Pulley Parachute Top, Aerochute Top or ParaRip Top design.

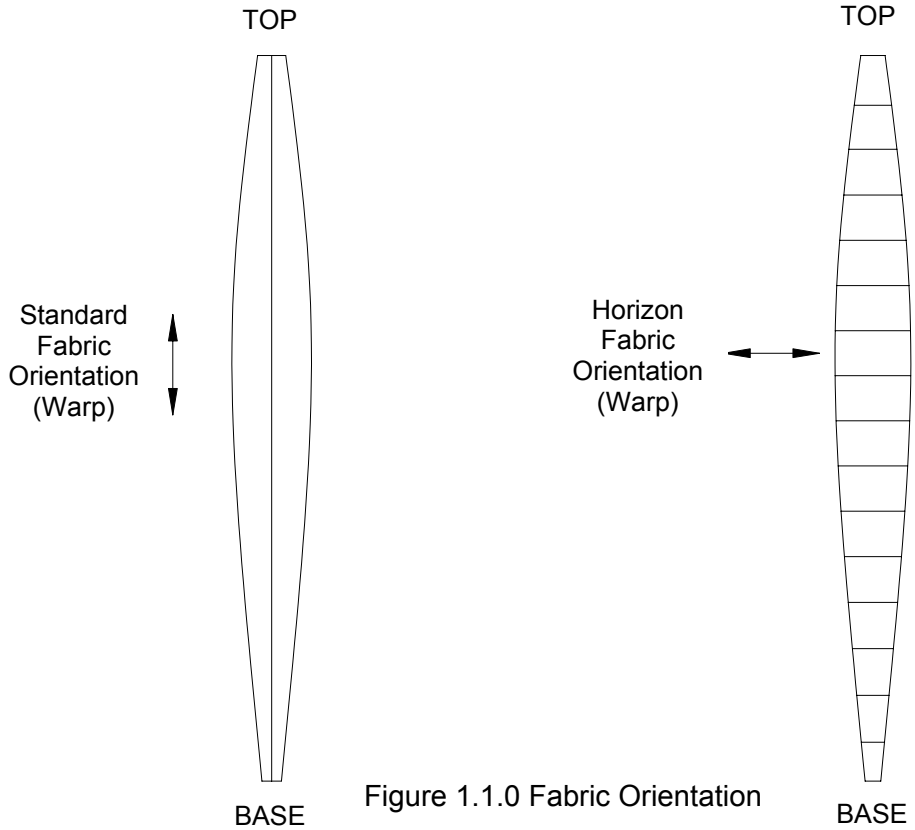

Figure 1.1.0 Fabric Orientation

The **RIP TOP** design, figure 1.1.1, has a circular panel sewn for 1/3 the distance around the deflation port at the top of the balloon.

The other 2/3 is sealed by the use of hook and pile fastener tape. An actuation line is attached to the edge of the hook and pile fastener sealed "rip" top, and extends to the basket, permitting the panel to be pulled open as a means of deflating the envelope.

Balloons with a rip top deflation system also have a maneuvering vent located on the side of the envelope. The maneuvering vent is a vertical opening that may be actuated by pulling on a line that is connected to the sides of the vent by means of actuation lines and D-rings. When the line is released, the vent automatically closes.

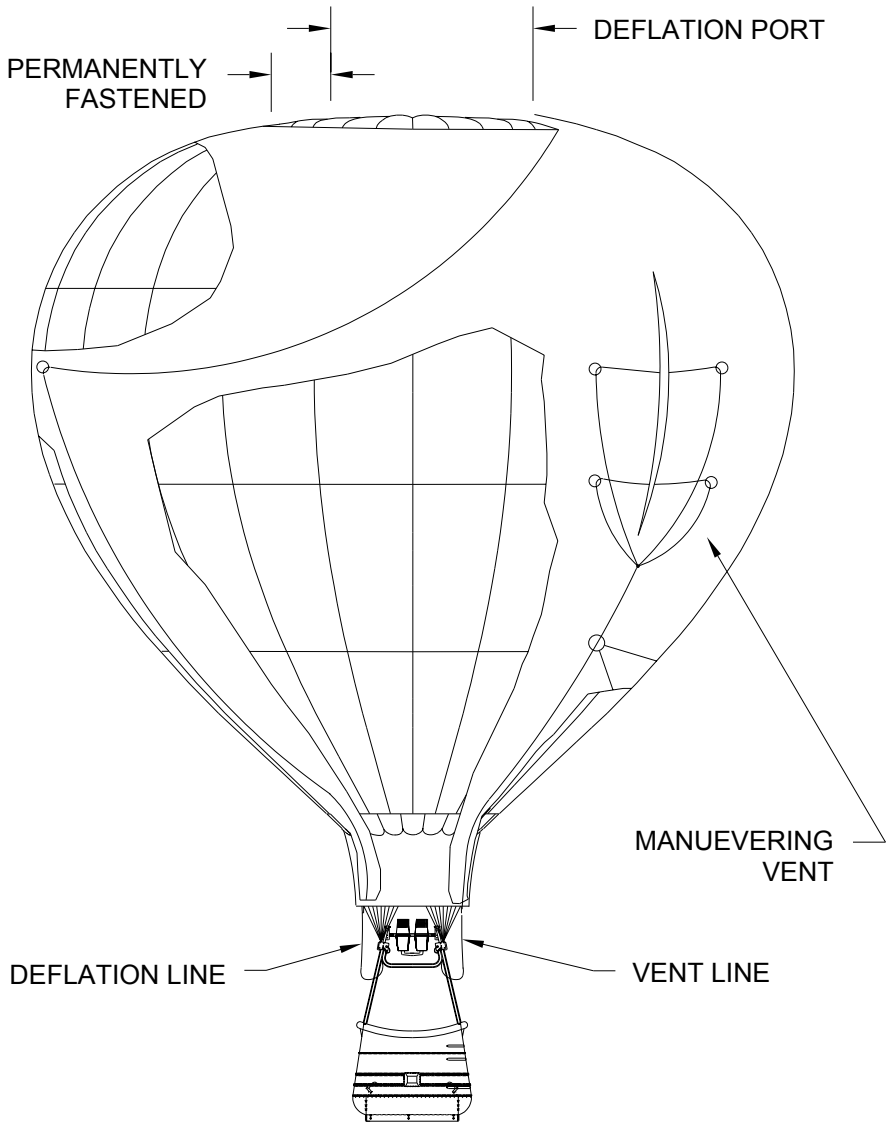

Figure 1.1.1 Rip Top Envelope Design

The **PARACHUTE TOP** design, figure 1.1.2, employs a parachute style panel covering the deflation port. Cords spaced equally around the circumference of the panel and fastened to the envelope wall will center the parachute and prevent it from exiting through the deflation port. Another set of cords from the edge of the panel is gathered together below the center of the panel and extends with a single line to the basket. Deflation is accomplished by pulling on the line, separating the parachute top from the edge of the deflation port, and allowing the hot air to escape from the envelope.

Venting on parachute top deflation system is accomplished by pulling on the deflation line for a short period of time. When the deflation line is then released, internal envelope pressures will cause the parachute top to close.

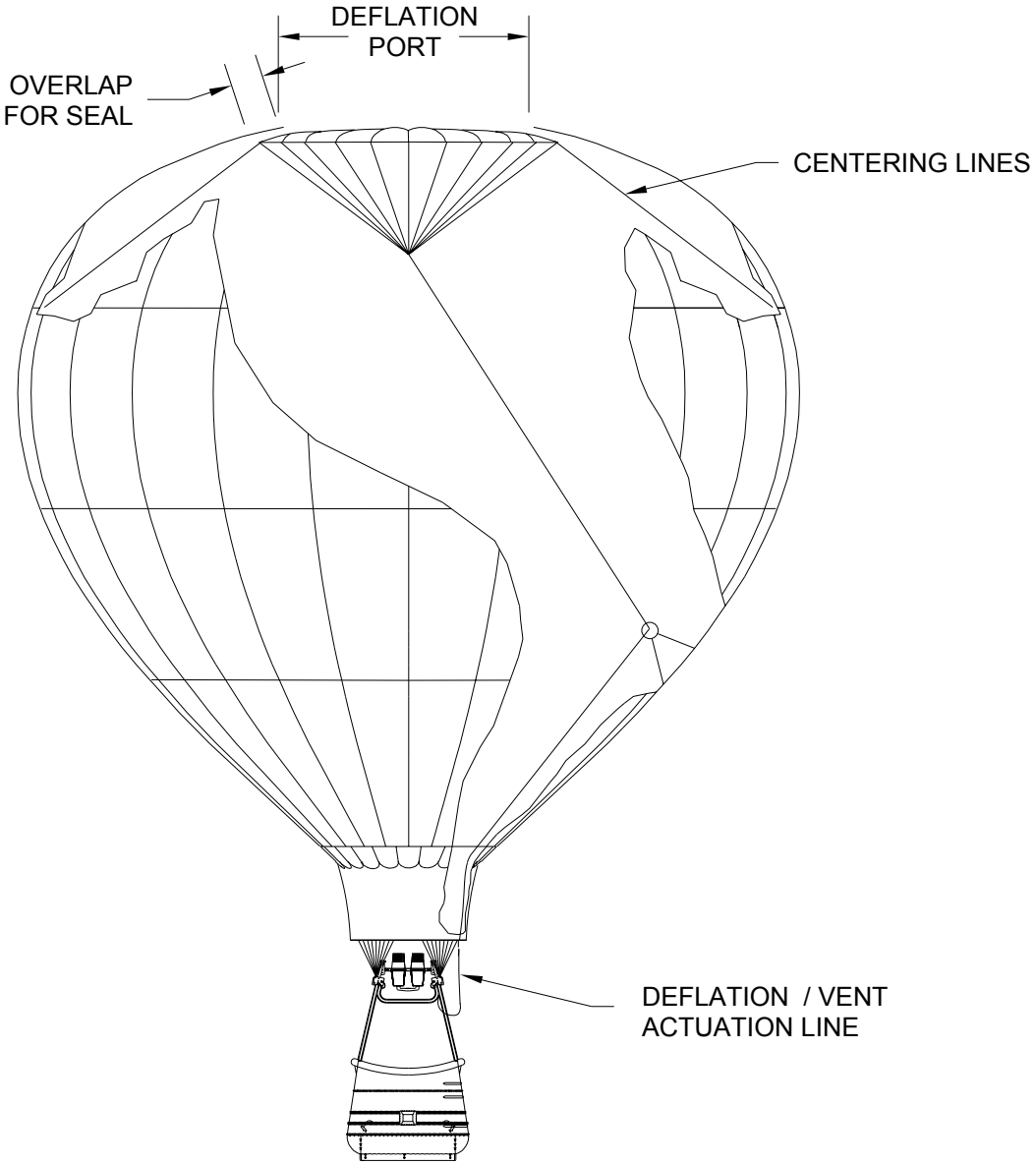

Figure 1.1.2 Parachute Top Envelope Design

The **PULLEY PARACHUTE** design, figure 1.1.3, employs a parachute style panel covering the deflation port. Cords spaced equally around the circumference of the panel and fastened to the envelope wall will center the parachute and prevent it from exiting through the deflation port. Another set of cords from the edge of the panel is gathered below the center of the panel and extends with a single line to a pulley. A deflation line runs through the pulley and attaches to the load block on the basket at corners 1 & 2. Deflation is accomplished by pulling on either side of the line, separating the parachute top from the edge of the deflation port allowing the hot air to escape from the envelope.

Venting on parachute top deflation system balloons is accomplished by pulling on the deflation line for a short period of time. When the deflation line is then released, internal envelope pressures will cause the parachute top to close.

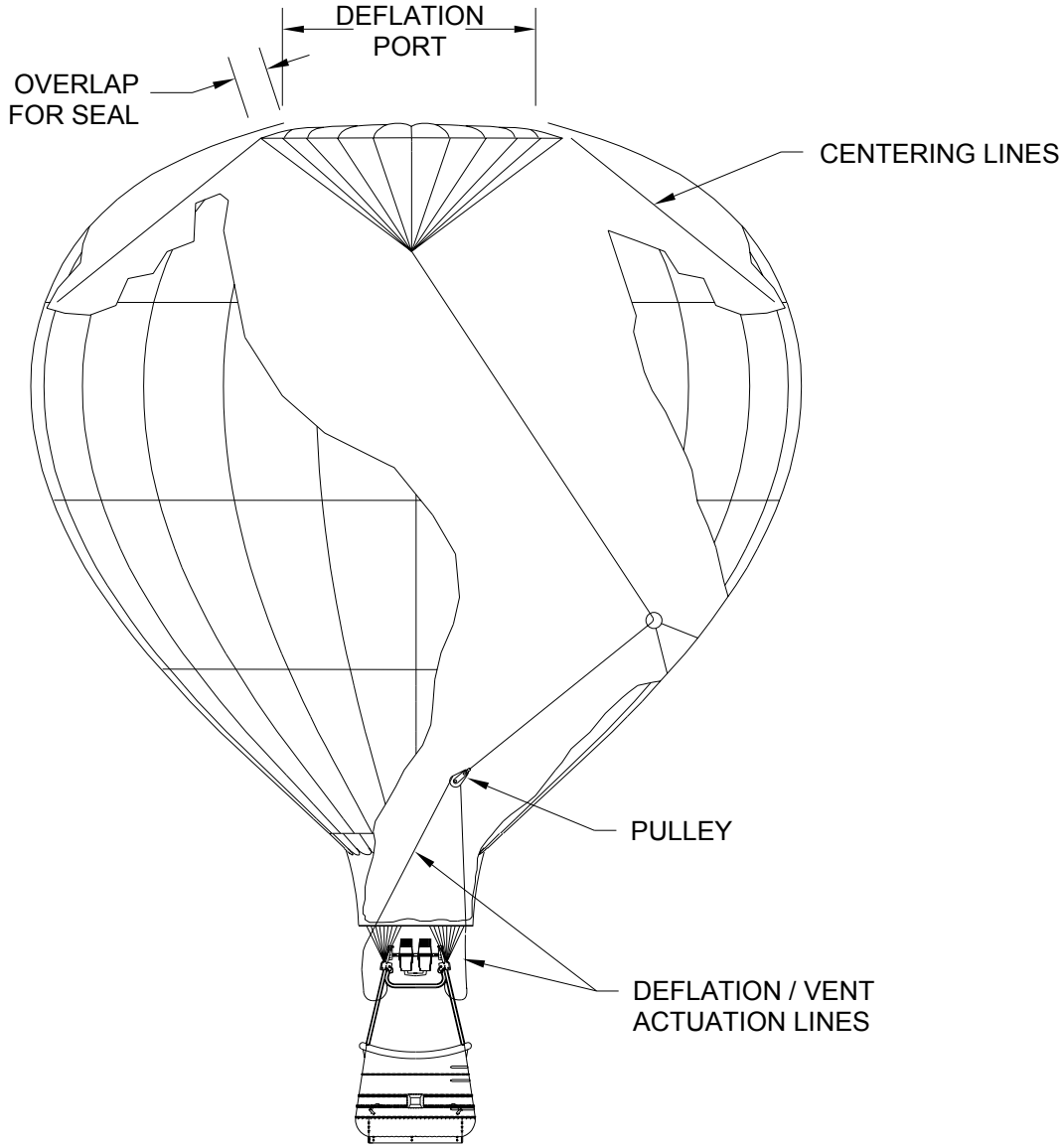

Figure 1.1.3 Pulley Parachute Envelope Design

The **AEROCHUTE TOP CAP** design, figure 1.1.4, employs a parachute style panel covering the deflation port. Combination cords are tied to a ring at the confluence point, and are routed through a ring at the top cap edge, through a ring at the stickman anchors, and back to the cap edge where they are tied off. The vent line runs from the confluence ring down to the basket with a pulley advantage identical to the pulley parachute. Venting is accomplished by pulling on either side of the pulley line, separating the top cap from the edge of the deflation port allowing the hot air to escape from the envelope.

Deflation on Aerochute top cap deflation system is accomplished by pulling on a red strap routed to the center of the top cap. The combination cords serving as both centering cords and confluence lines allow the cap to be drawn inward and down affecting a rapid deflation. A quick pull on the vent line will reverse the deflation process and reseal the top cap.

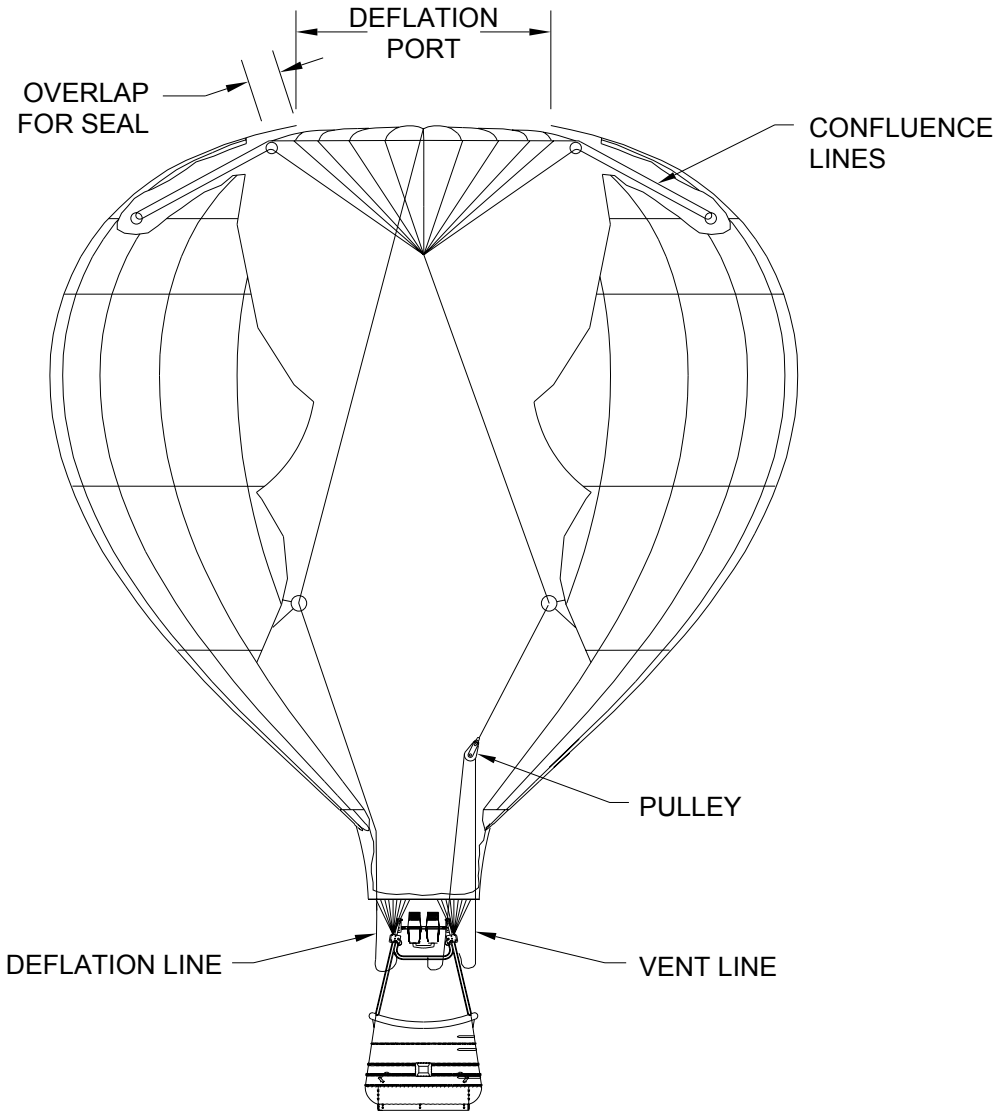

Figure 1.1.4 Aerochute Envelope Design

The **SPRING TOP™** design, figure 1.1.5, uses an oversized panel covering 1/3 of the deflation port. The Spring Top™ is very similar to the rip top in 16, 20 and 24 gore balloons in that the 2/3 portion overlaps the port opening by 12" and torsion springs and pockets (Figure 1.1.6) are used for retention of the deflation panel.

The paravent of the Spring Top™ deflation system is located in the opposite 1/3 portion of the port opening. It is configured identically to the parachute top, except that the actuation line is routed to the opposite side of the envelope. Here, the overlap of the panel is the same as the other 2/3 and venting is accomplished by pulling the actuation line. Its action is the same as the parachute top, although on a smaller scale. This allows the Spring Top ™ vent system the responsive nature of the parachute top.

The vent actuation and deflation lines of the Spring Top ™ are also much different that the rip top lines in that they are Kevlar reinforced for burn through protection. Should the outer nylon cover burn away, the Kevlar reinforcement will char, but retain most of its strength so that the deflation/venting may still be accomplished.

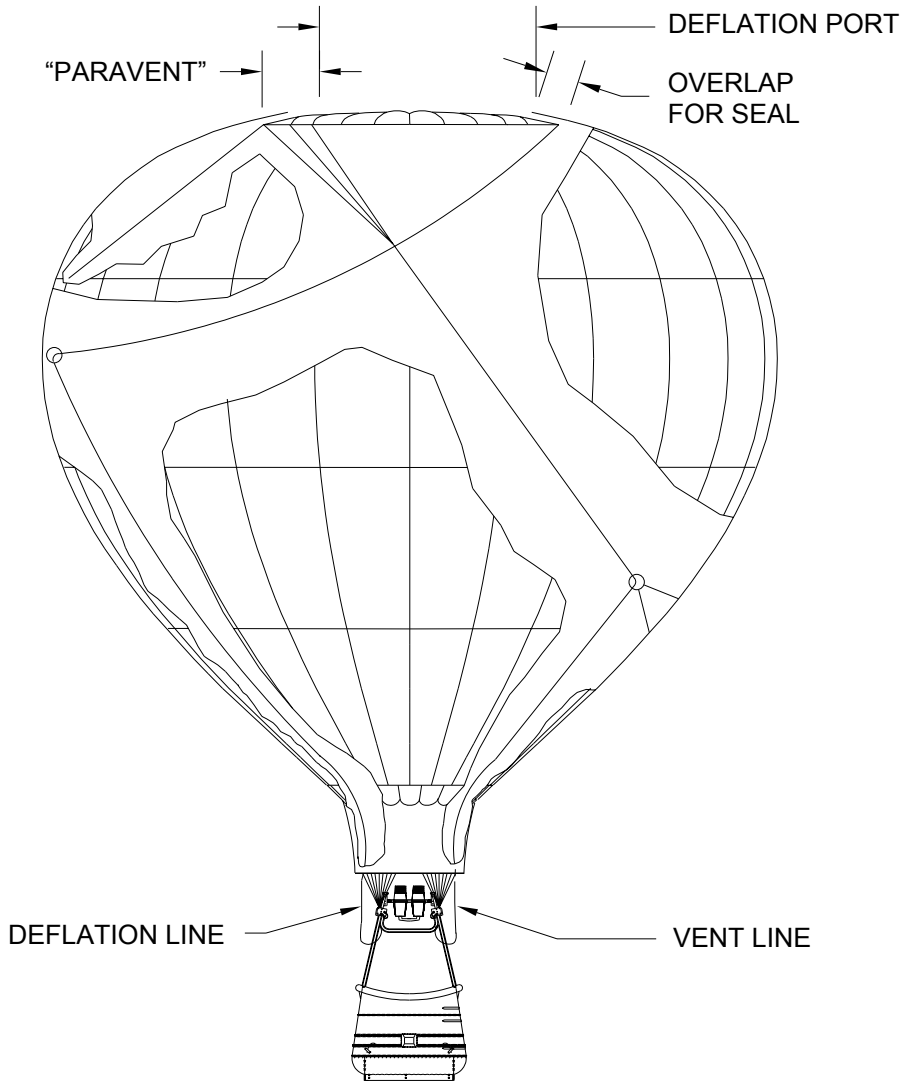

Figure 1.1.5 Spring Top ™ Envelope Design

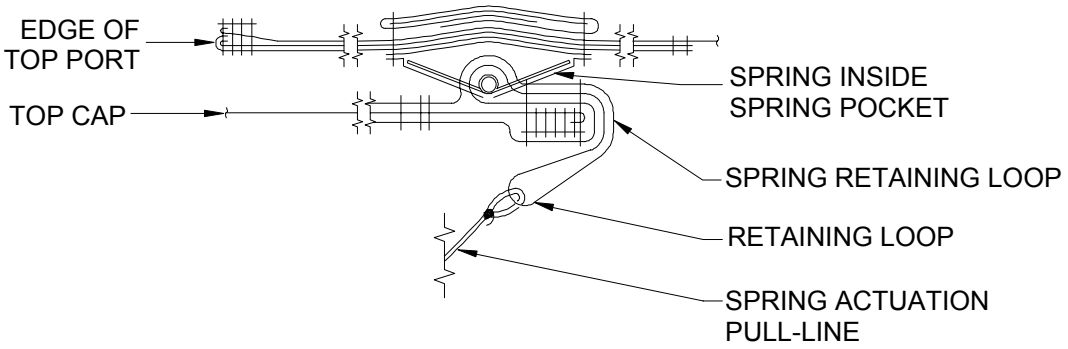

Figure 1.1.6 Spring/Pocket Interface

The spring and pocket combinations are located on untaped seams on S series balloons and both between seams and on seams on Rally balloons, centered 12" from the port edge. The torsion spring is attached to the deflation panel, and the retention pocket is attached to the envelope.

Some S-77A and some later model S-66A balloons make use of a mechanical advantage pulley system attached to the four center springs with a special spring pocket design. In early 1987, a fourth deflation/venting system was installed in all production S-77A and S-71A balloons and was available as an option in S-66A balloons.

The **PARA-RIP TOP™** design, figure 1.1.7, uses a circular panel with 2/3 sealed by the use of hook and pile fastener tape, identical to the rip top design. An actuation line is attached to the edge of the hook and pile fastener sealed “rip top” and extends to the basket permitting the panel to be pulled open as a means of deflating the envelope.

The para-vent of the Para-rip Top™ deflation system is located in the opposite 1/3 portion of the port opening. It is configured identically to the parachute top, except that the actuation line is routed to the opposite side of the envelope. Venting is accomplished by pulling the actuation line. The vent action is the same as the parachute top, although on a smaller scale, allowing the Para-vent system the responsive nature of the parachute top.

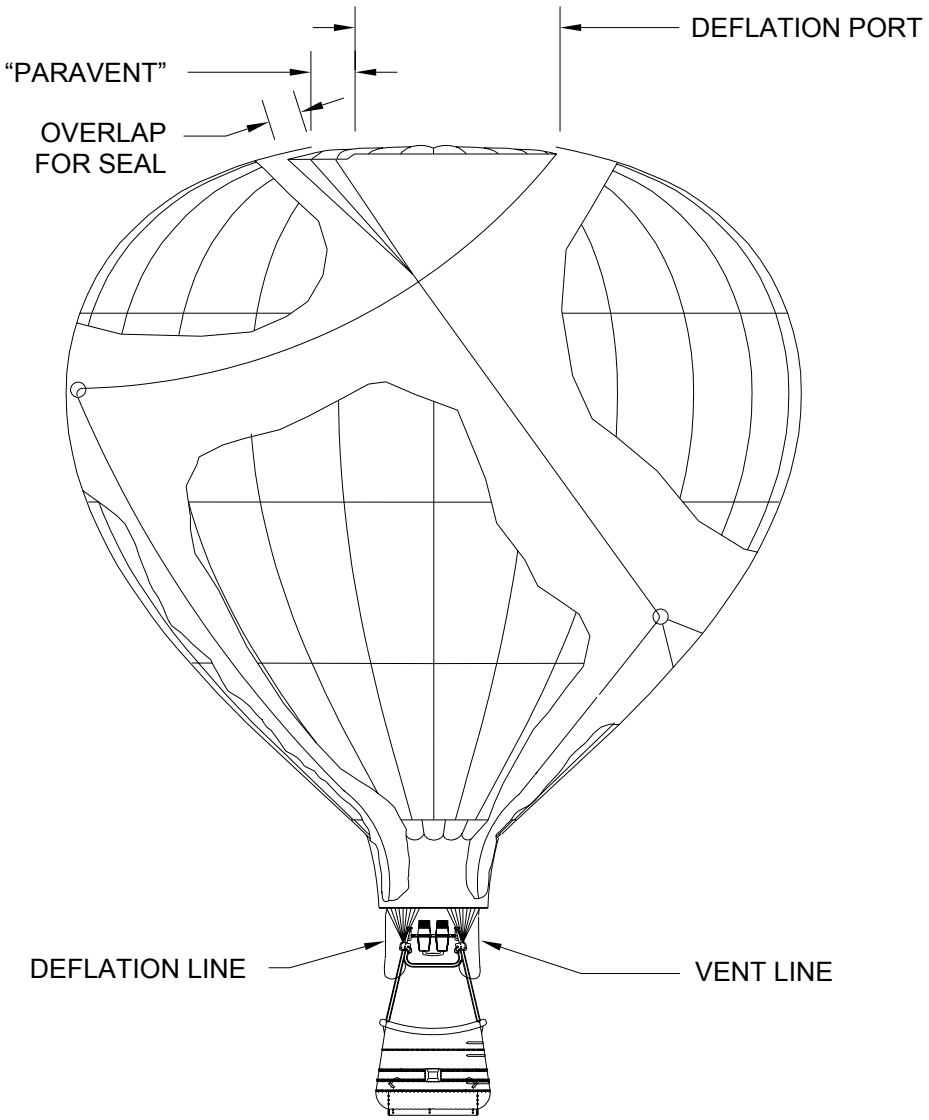

Figure 1.1.7 Para-Rip Top™ Envelope Design

The **Rotator Vent**
Prior to January 1989, Spring Top* and Parachute Top systems had the option of being equipped with a rotator vent which is similar in design to the maneuvering vent, but is approximately ½ the opening area and allowed rotation of the envelope in one direction. After that date, dual rotators were installed allowing rotation in either direction. This vent is not designed for normal venting off of excess amounts of hot air. Note: Rotator may use metal guide rings in place of pulleys, depending on year of manufacture.

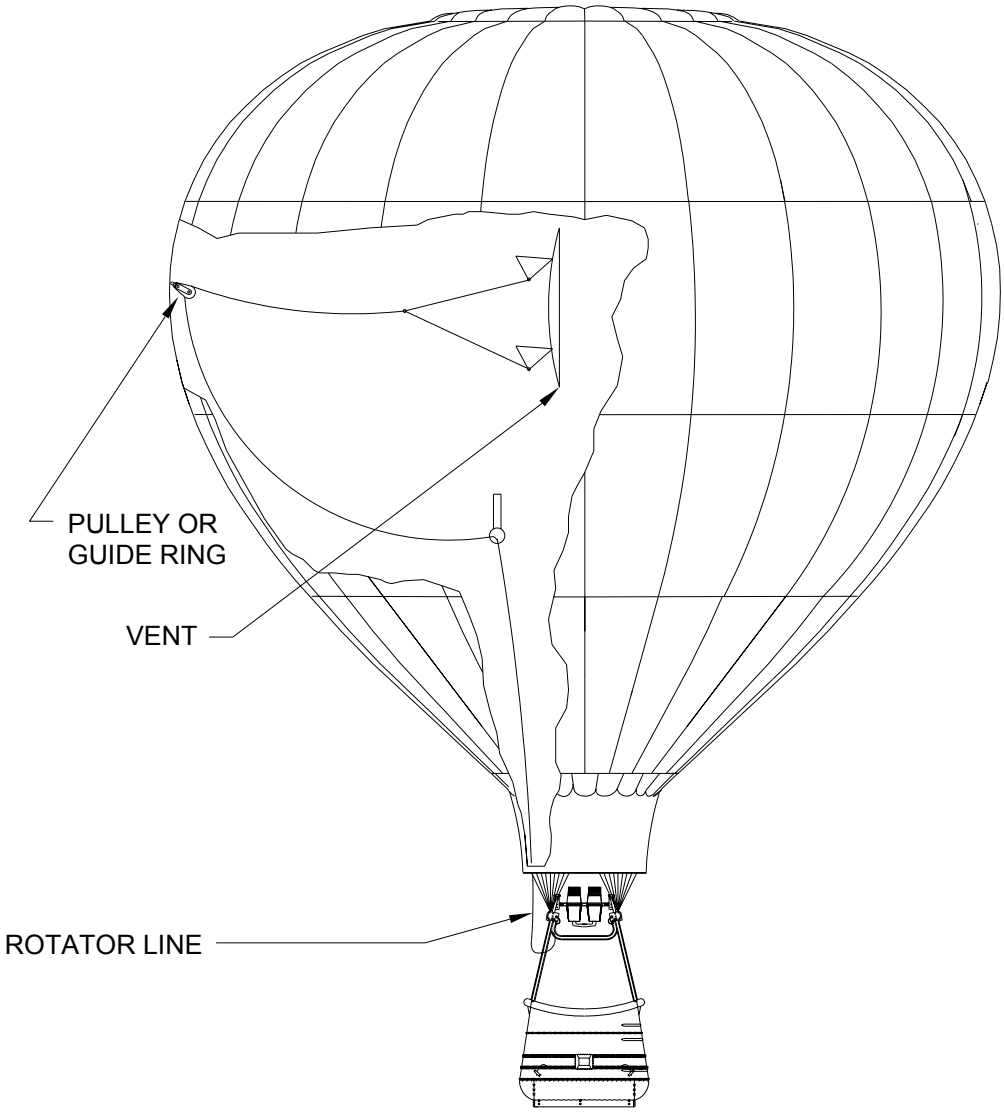

Figure 1.1.8 Rotator Vent – Single

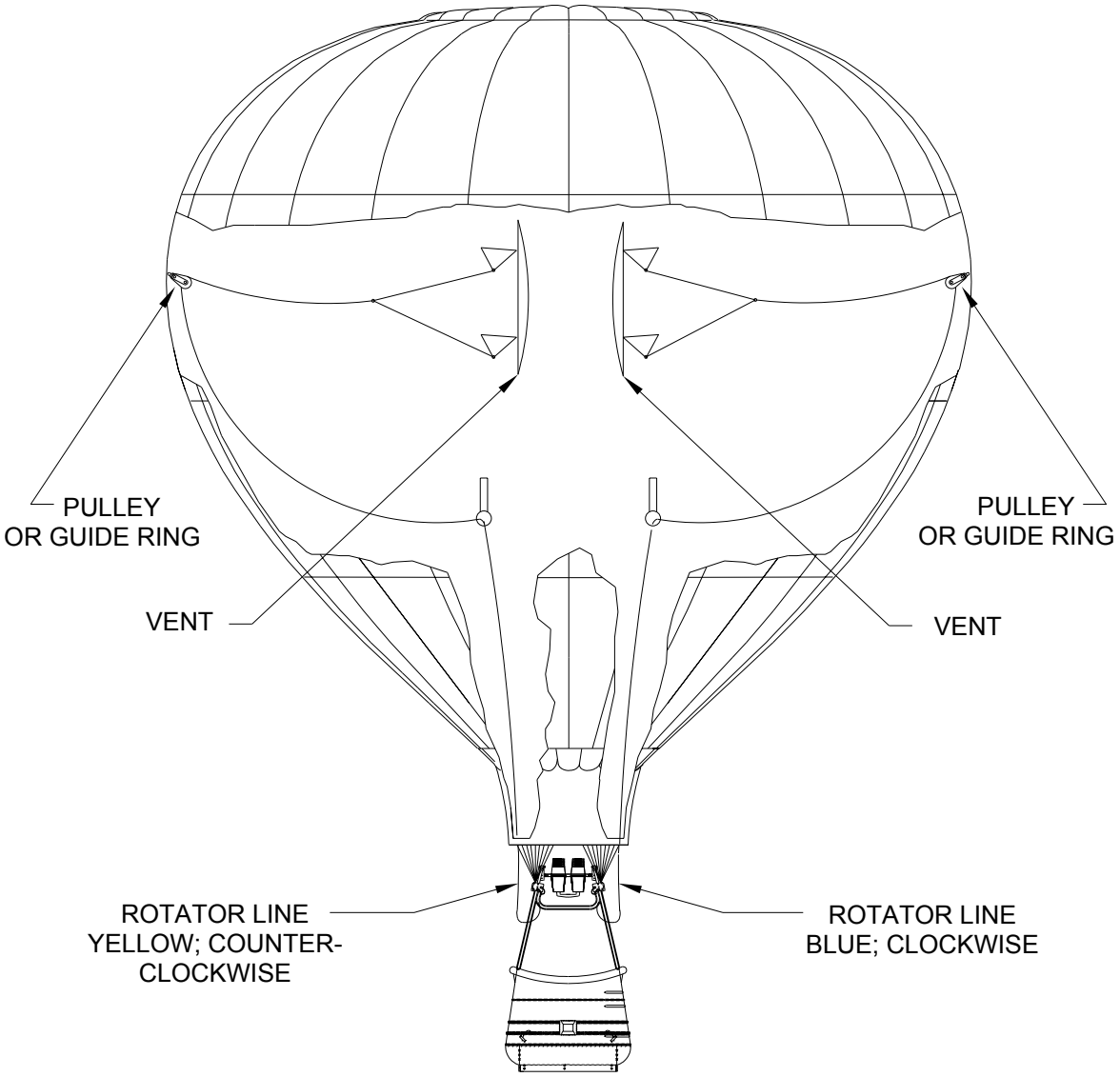

Figure 1.1.9 Rotator Vent - Dual

1.2 BURNER AND FUEL SYSTEM

Propane fuel is used to heat the air and generate buoyancy for flight. The propane is stored in one or more fuel tanks located in the basket. A withdrawal tube attached to the liquid tank valve permits liquid propane to be drawn from the bottom of the fuel tanks and supplied to the burner assembly through the fuel hoses that connect the fuel tanks and burner assembly. Since fuel is withdrawn at a very high rate, check valves (or excess flow valves) are not used on the fuel tanks. Such valves must NOT be installed since they may operate on normal burner fuel demand and thus disable the burner.

With a liquid pilot light, liquid propane is taken from the main supply at the burner via a pilot shut off valve. The fuel goes through a vapor converter and regulator and is distributed through a pilot head. A piezo igniter (red button) that is located in close proximity to the shut off valve is used to light the pilot.

With a vapor pilot light, another fuel hose is used to supply vapor from the pilot light tank valve located on top of the fuel tank to the burner assembly pilot light. A regulator is used to decrease the pressure of the propane vapor for better pilot operation. A pilot light valve located on the burner controls the flow of propane vapor to the pilot light. A small filter in the assembly prevents contaminants from reaching the pilot light.

The liquid tank valve controls the flow of liquid propane to the burner. The blast valve, metering valve or the glow valve controls fuel flow at the burner. With the liquid tank valve open, opening the burner blast valve or metering valve will permit liquid propane to enter the heat exchange coil where it is either completely or partially vaporized. After exiting the heat exchange coil through the orifices in the nozzle coil, propane will then be ignited by the pilot light. Opening the optional glow valve allows propane to flow to the glow burner head located at the top of the heat exchange coils, which is then ignited by the pilot light.

The fittings used to construct the fuel hoses, fuel tanks, and burner assemblies are high quality commercial fittings of four general types:

(1) Flare fittings (JIC), used to connect the fuel hoses to the burner, and in some instances connects the fuel hose to the fuel cylinder.

(2) Compression fittings used on the tubing connections.

(3) Pipe fittings, used to connect valves, tubing, or hoses together.

(4) Hand turn POL fittings or CGA-555 fittings, used to connect the main fuel hose to the fuel tank withdrawal valve.

If components are disassembled for repair, fittings can be considered reusable if undamaged. Fuel hose end fittings must not be removed from the raw hose. Fuel hoses should be replaced as complete units only.

ONLY AEROSTAR REPLACEMENT HOSES
ARE TO BE USED IN YOUR EQUIPMENT.

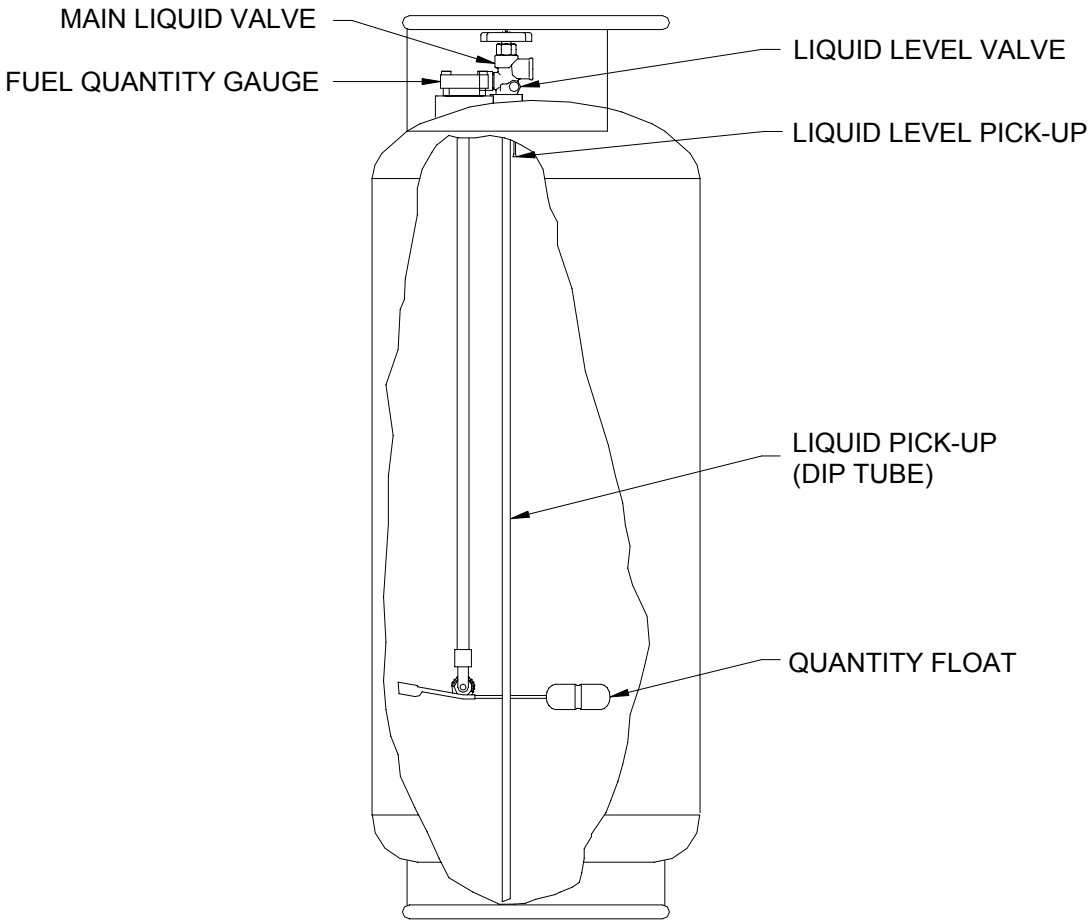

VERTICAL SINGLE SERVICE FUEL TANK

15 GAL. -	HEIGHT – 35.0” DIAMETER – 14.0”
18 GAL -	HEIGHT – 40.25” DIAMETER – 14.0”
23 GAL -	HEIGHT – 48.375” DIAMETER – 14.0”

Figure 1.2.1 Vertical Fuel Tanks

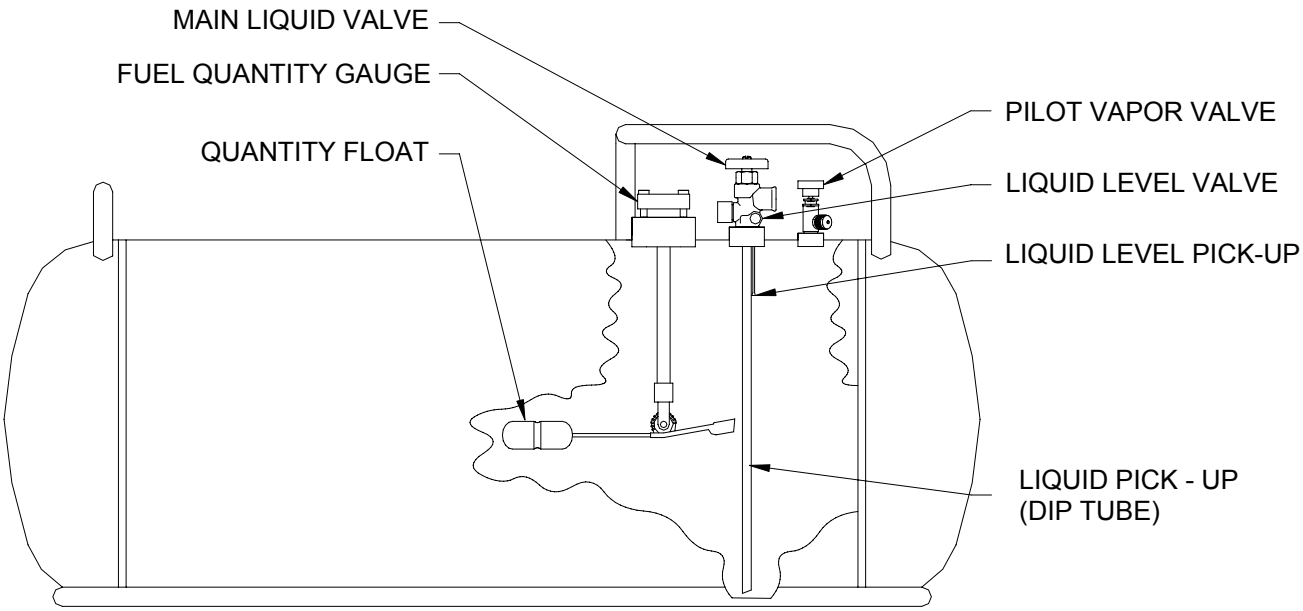

HORIZONTAL FUEL TANKS

H-20 - LENGTH - 38.25”
DIAMETER - 14.0”

H-25 - LENGTH - 47.5”
DIAMETER - 14.0”

Figure 1.2.2 Horizontal Fuel Tank

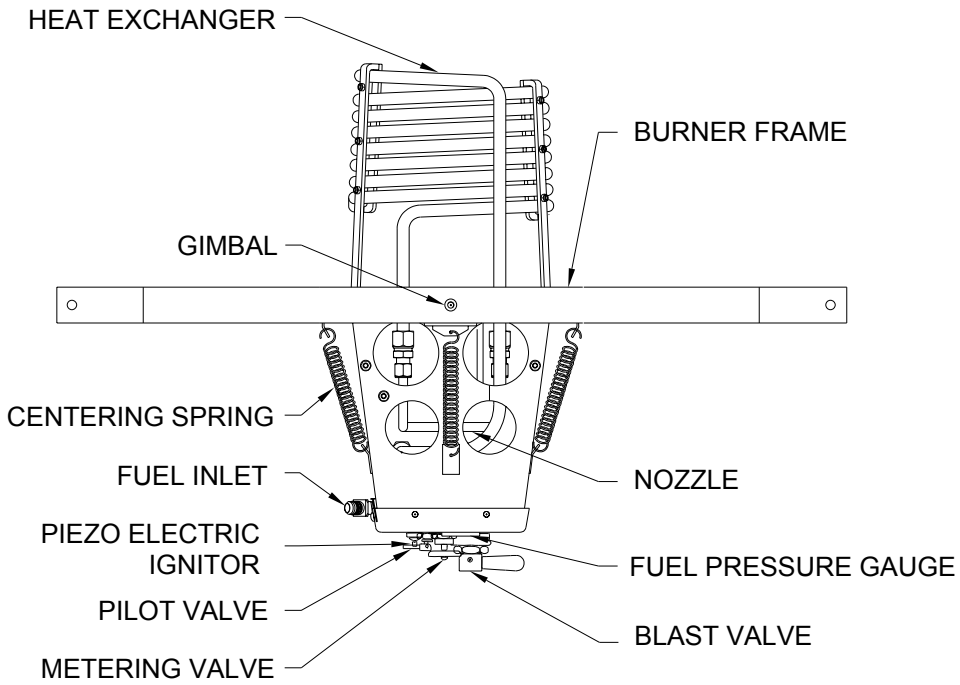

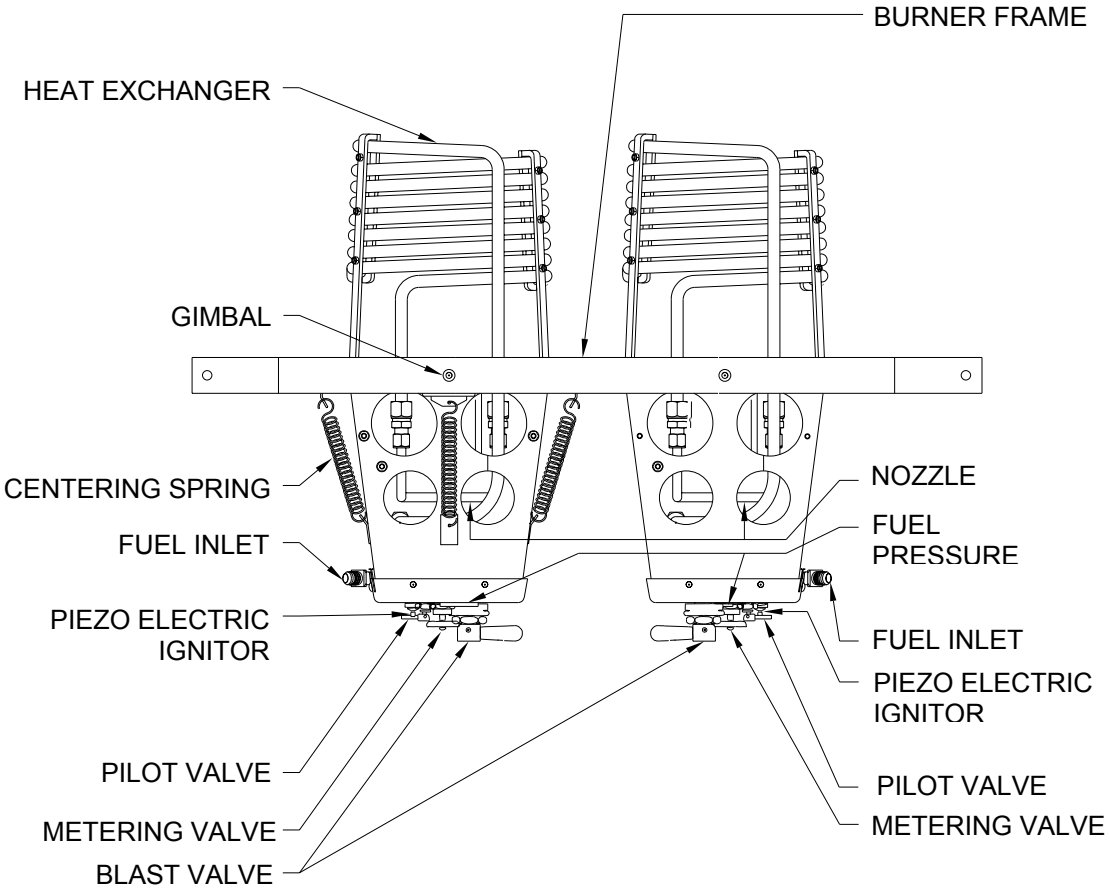

Figure 1.2.3 HPII Single and Dual Burner Systems
Note: Depiction for update burners slightly different.

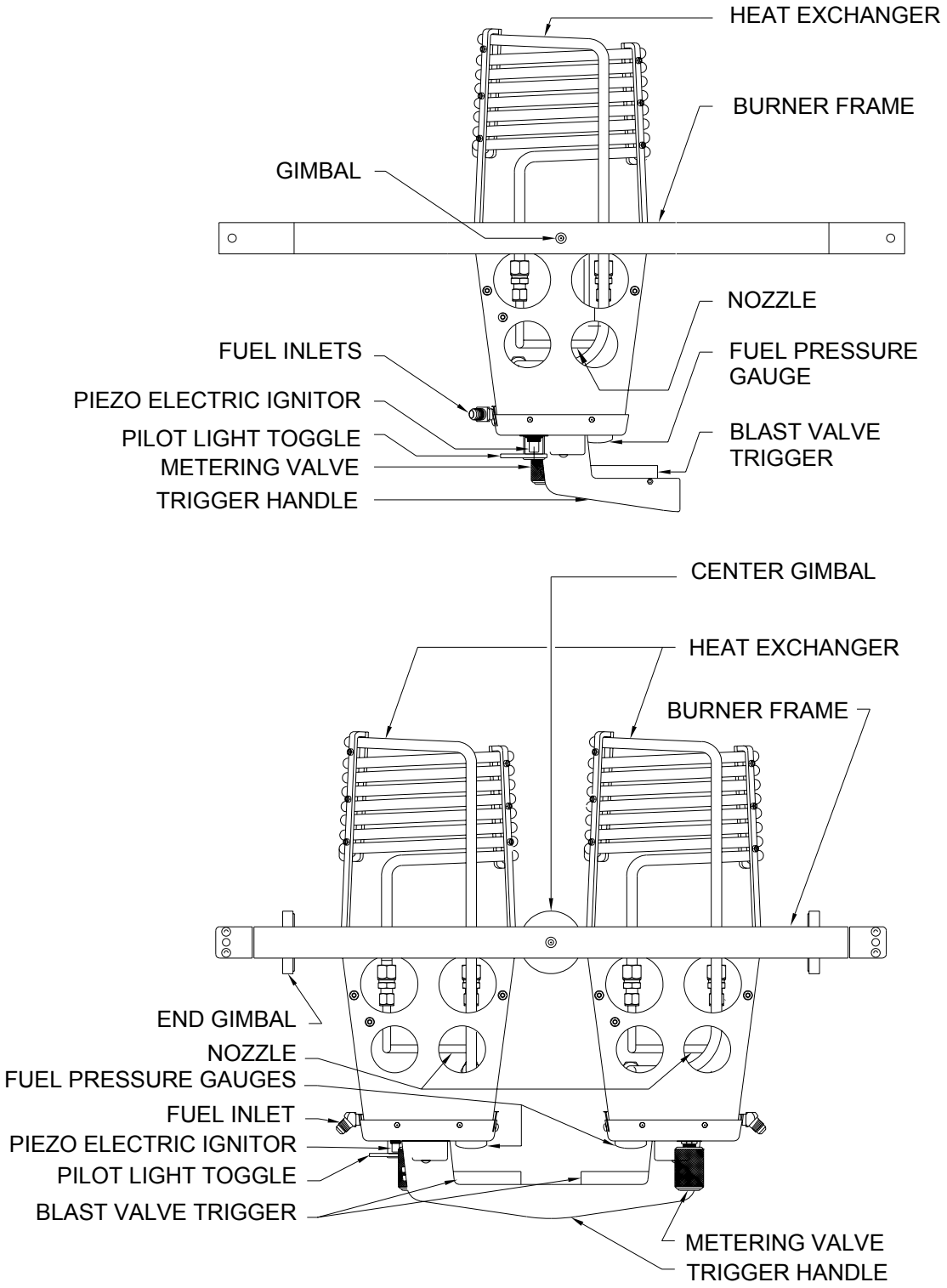

Figure 1.2.4 HPIII Single and Dual Burners
(optional glow valve not shown for clarity)

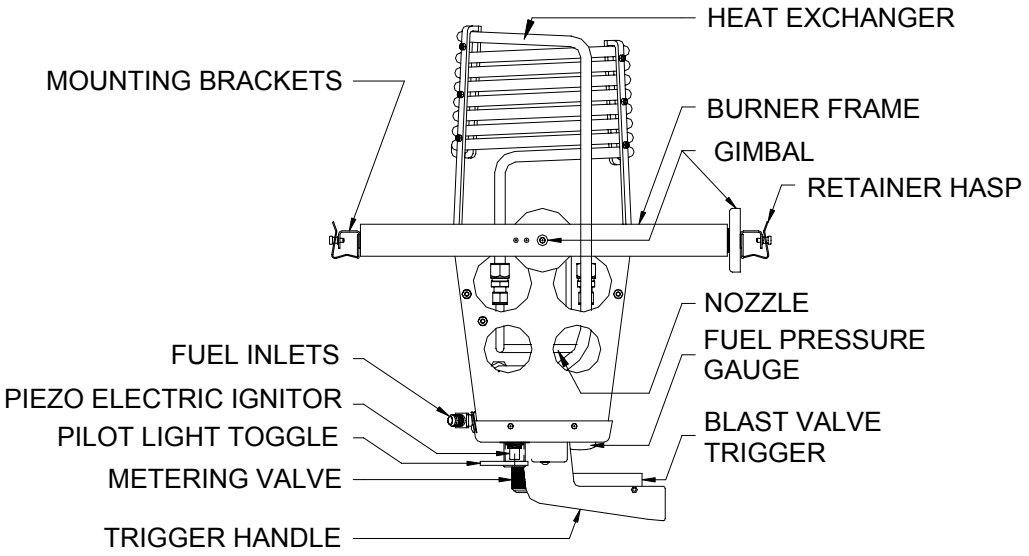

Figure 1.2.5 HPIII Single Burner Aurora (ELS)
(optional glow valve not shown for clarity)

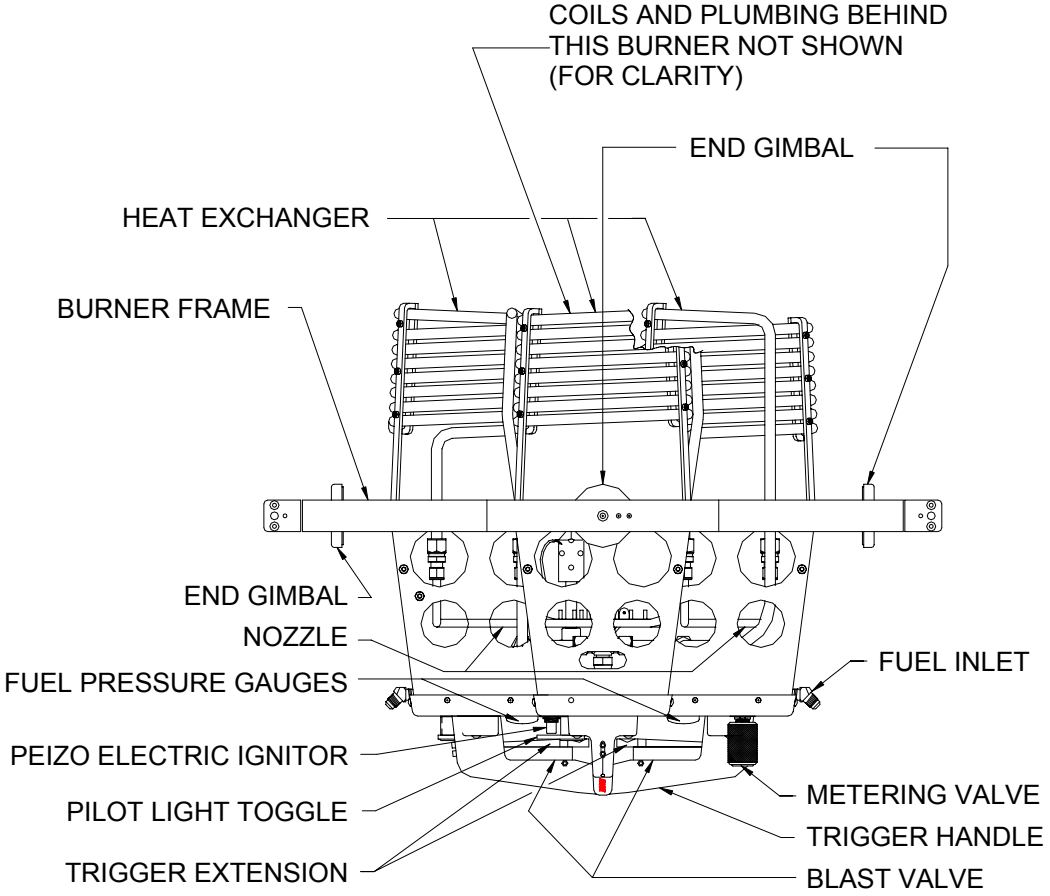

Figure 1.2.6 HPIII Triple Burner

(Intentionally left blank)

1.3 BASKET (GONDOLA)

The Model CW, CWV, CWS, RW, TW, RWS, RWSW, ELS, ELSS, RB5, RB6, RB8 and RB12 baskets have the same basic structure and features. The aluminum or stainless steel support tubes located on the upper portion of the structure are used to transfer the basket load to the envelope and also as a means of mounting the burner assembly. The support tubes are connected using quick release pins or aircraft bolts to the aluminum or stainless steel lower frame tubes. The lower frame tubes support the floor, permitting the floor loading to be transferred to the lower frames. The plywood floor is bolted to an oak framework that adds rigidity and a point of abrasive resistance to the floor. The rattan sidewalls surround and protect the occupants and equipment. Exclusive to the RB5, RB6 RB8 and RB12 is a padded center divider or passenger compartments.

Model CW-AFX and RWSW-AFX utilize flexible synthetic rods for uprights that fit into sockets at the top frame and lower tubes (handrail height). The primary load is carried by suspension cables attached to the lower tubes and connected to the top frame with carabiners.

The Model G differs from the above mentioned baskets because man-made materials are used exclusively. The passenger compartment consists of an aluminum square tubing framework with fiberglass panels used for the floor and sidewalls.

All baskets contain the following instruments: altimeter, rate-of-climb indicator (variometer), internal envelope temperature indicator (pyrometer).

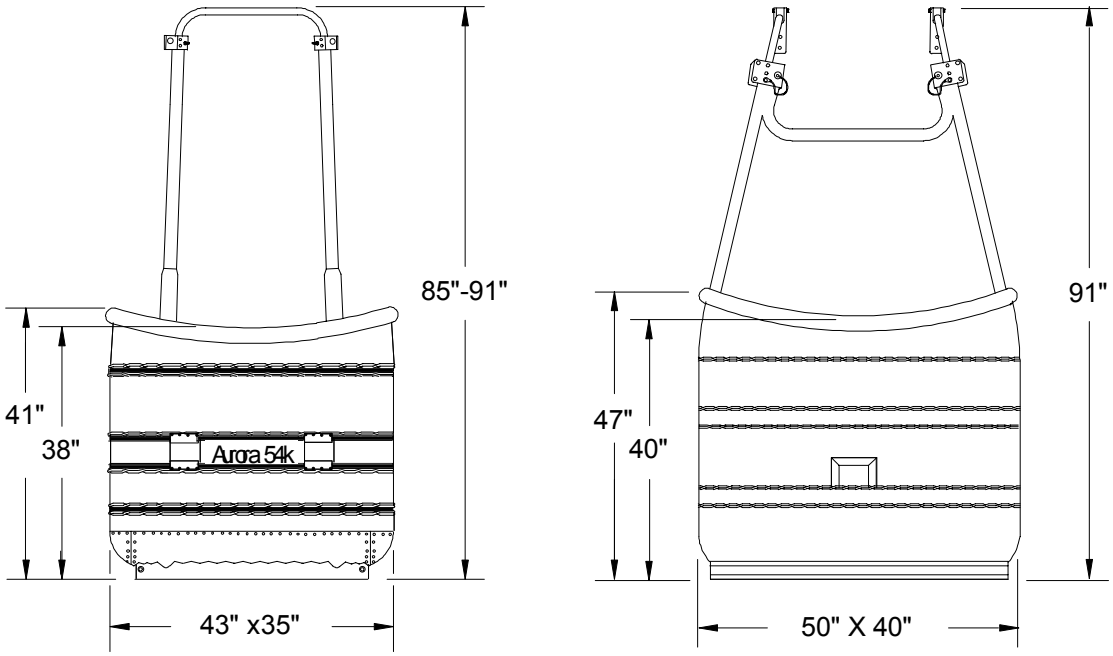

AURORA (ELS)

Average Weight with Basket, Aluminum Superstructure, Single Burner, One 20-Gallon Stainless Steel Tank, Fuel Hoses and Instruments.165 lbs.

Added Weight For:

Two 15 Gallon (in place of one 20)	40 lbs.
Padded Uprights	3 lbs.
Scuff Pad	4 lbs.
Padded Leather Seat	6 lbs.
Stainless Steel Superstructure	13 lbs.

CLASSIC (RWS)

Average Weight with Basket, Aluminum Superstructure, Single Burner, Two 15-Gallon Stainless Steel Tanks, Fuel Hoses and Instruments. 270 lbs.

Added Weight For:

15 Gallon Tank Kit w/Straps & Hoses	45 lbs.
“Zone Five” Burner	20 lbs.
Suede Side Rails and Uprights	4 lbs.
Stainless Steel Superstructure	25 lbs.

Figure 1.3.1 Aerostar Basket Specifications

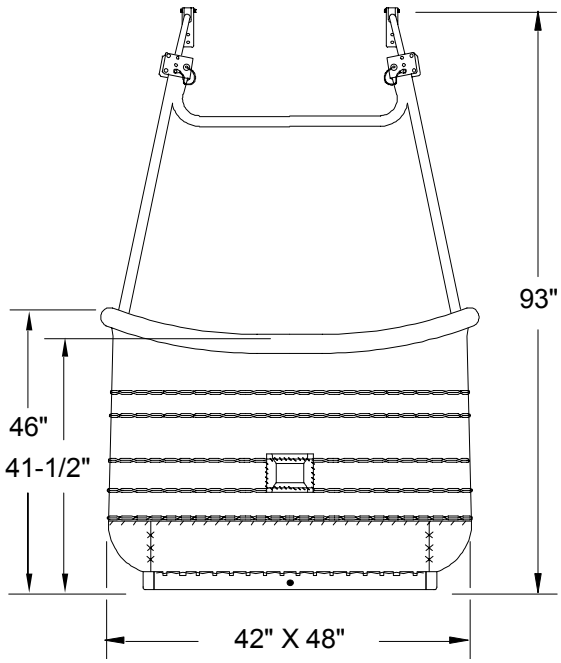

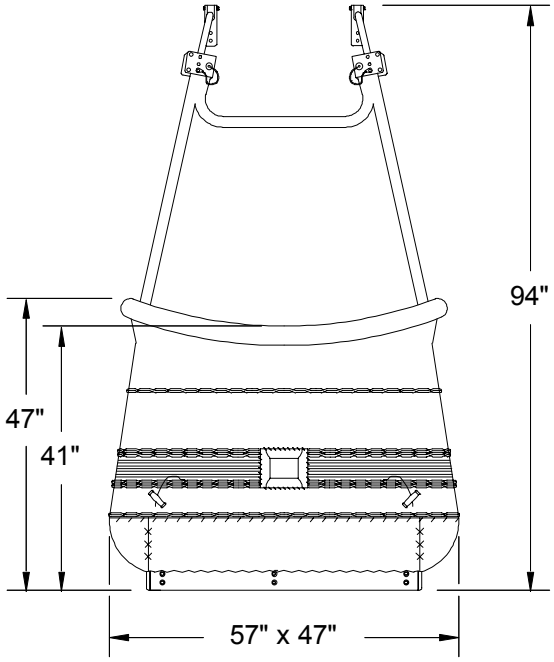

CLASSIC II (RWSW)

Average Weight with Basket, Aluminum Side Frames, Single Burner, Two 15-Gallon Stainless Steel Tanks, Fuel Hoses and Instruments. 245 lbs.

Added Weight For:

15 Gallon Tank Kit w/Straps & Hoses	45 lbs.
"Zone Five" Burner	20 lbs.
Suede Side Rails and Uprights	4 lbs.
Stainless Steel Superstructure	25 lbs.

CLASSIC LIMITED (CW)

Average Weight with Basket, Single Burner, Two 15-Gallon Stainless Steel Tanks, Fuel Hoses and Instruments. 320 lbs.

Added Weight For:

Two 20 Gal. Tanks (in place of 2/15)	6 lbs.
15 Gal Tank Kit w/Straps and Hoses	45 lbs.
"Zone Five" Burner	20 lbs.
Padded Leather Seat	15 lbs.
Champagne Console	18 lbs.
Electronic Blast	4 lbs.

Figure 1.3.2 Aerostar Basket Specifications

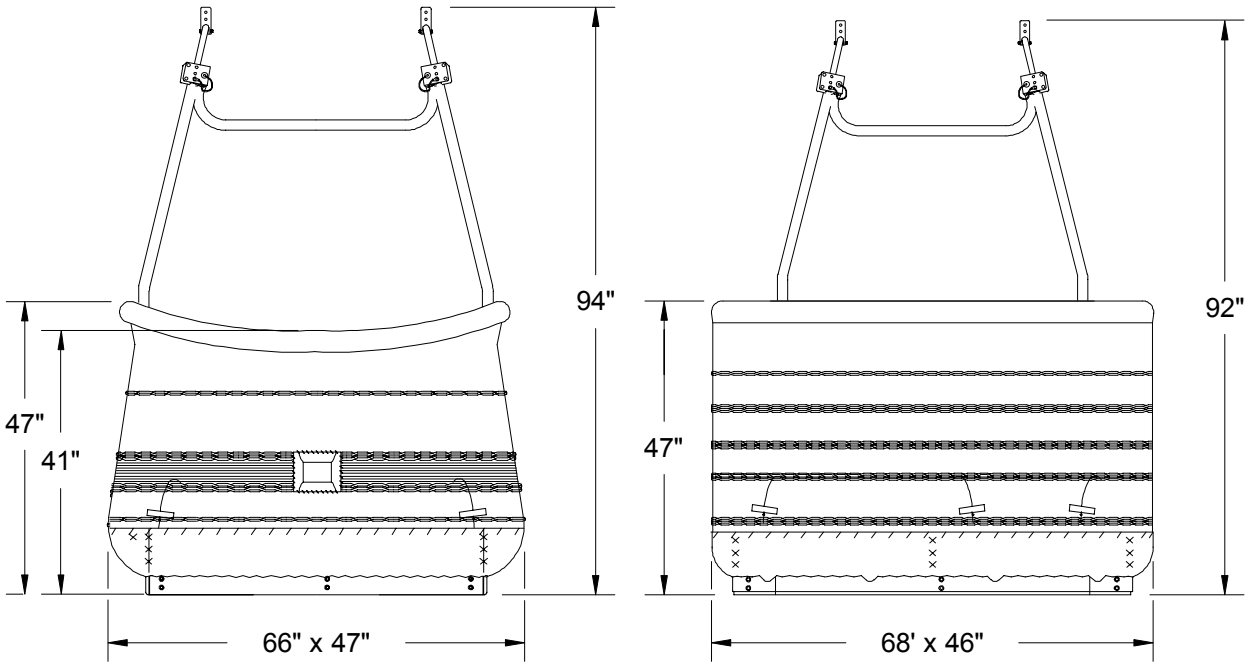

CLASSIC LIMITED STRETCH (CWS)

Average Weight with Basket, “Zone Five” Burner, Two 15-Gallon Stainless Steel Tanks, Fuel Hoses and Instruments. 350 lbs.

Added Weight For:

2/20 Gal. Tanks (in place of 2/15)	6 lbs.
15 Gal. Tank Kit w/Straps and Hoses	45 lbs.
Padded Leather Seat	18 lbs.
Champagne Console	18 lbs.
Electronic Blast	4 lbs.

CLASSIC VIII (RB5)

Average Weight with Basket, “Zone Five” Burner, Three 15-Gallon Stainless Steel Tanks, Fuel Hoses and Instruments. 475 lbs.

Added Weight For:

2/18 Gal. Tanks (in place of 2/15)	10 lbs.

Figure 1.3.3 Aerostar Basket Specifications

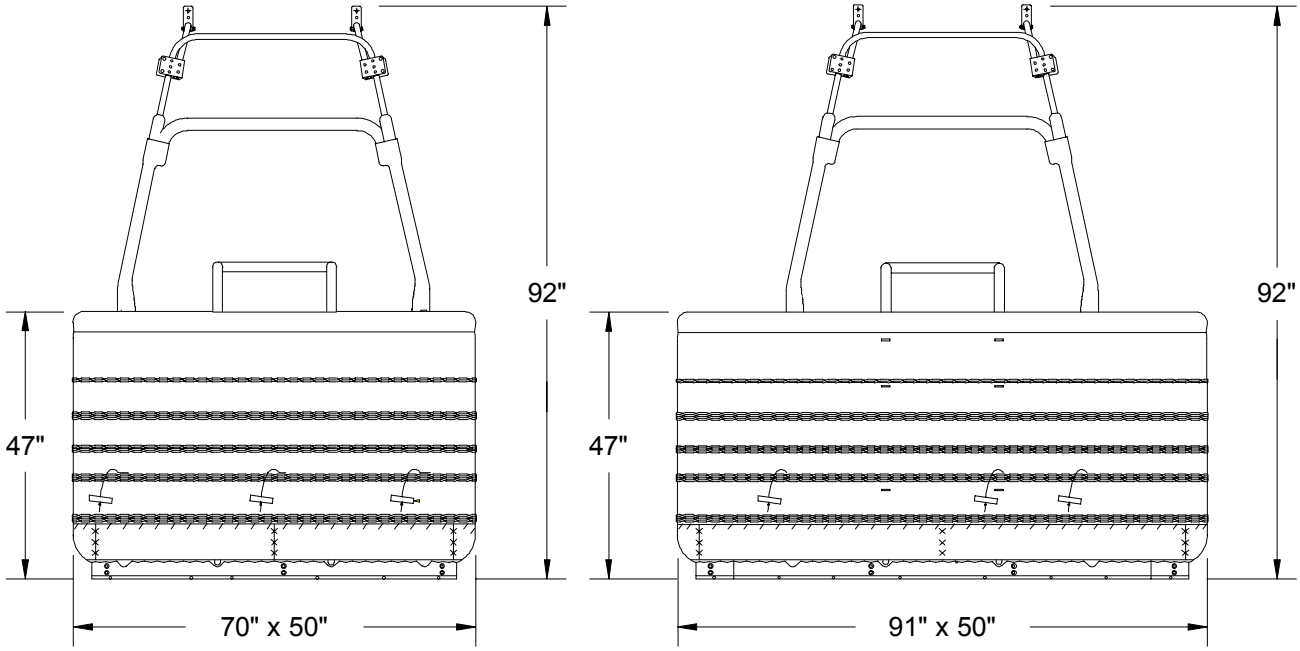

CLASSIC IX (RB6)

Average Weight with Basket, “Zone Five” Burner, Two 23.5-Gallon Stainless Steel tanks, Fuel Hoses and Instruments. 495 lbs.
Added Weight For:
15 Gal. Tank Kit w/Straps and Hoses 45 lbs.

CLASSIC X (RB8)

Average Weight with Basket, “Zone Five” Burner, Three 23.5-Gallon Stainless Steel tanks, Fuel Hoses and Instruments. 615 lbs.
Added Weight For:
15 Gal. Tank Kit w/Straps and Hoses 45 lbs.

Figure 1.3.4 Aerostar Basket Specifications

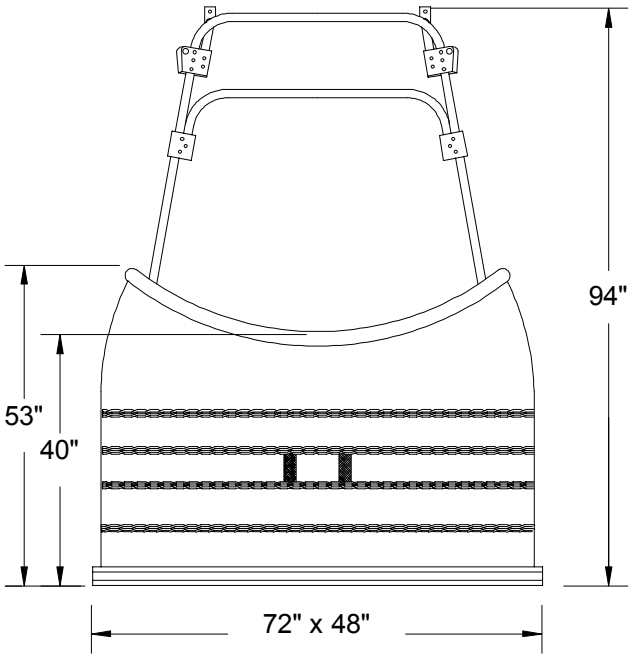

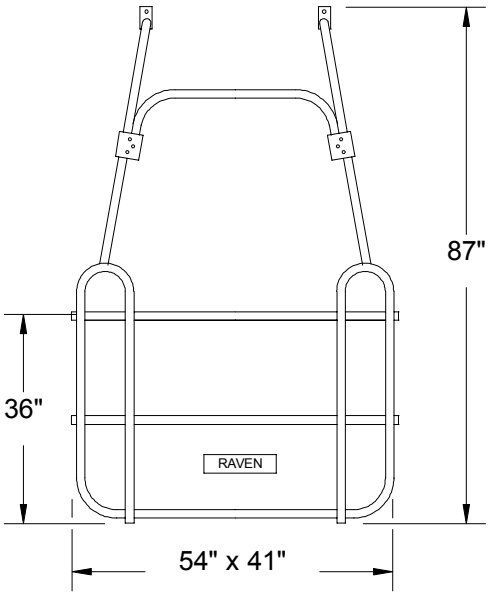

CLASSIC IX (TW1)	PROMOTIONAL
Average Weight with Basket, Double Burner, Six 10-Gallon Aluminum Tanks, Fuel Hoses and Instruments. 471 lbs.	Average Weight with Basket, Single Burner, Two 20-Gallon Stainless Steel Tanks, Fuel Hoses and Instruments. 223 lbs.

Figure 1.3.5 Aerostar Basket Specifications

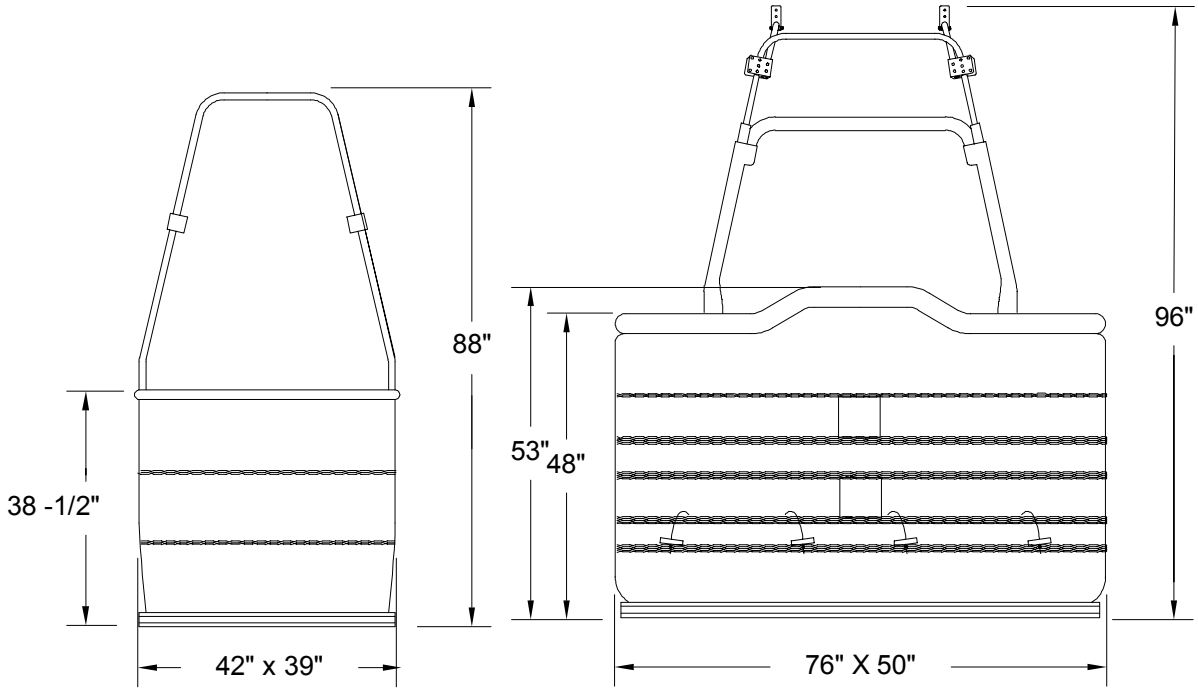

RALLY II

Average Weight with Baskets, Single Burner, Two 10-Gallon Aluminum Tanks, Fuel Hoses and Instruments. 197 lbs.

Added Weight for;
10 Gallon Tank Kit w/Straps and Hoses 31 lbs.

CLASSIC X (compartments)

Average Weight with Basket, “Zone Five” Burner, Two 23.5 & one 15-Gallon Stainless Steel Tanks, Fuel Hoses and Instruments. 540 lbs.

Figure 1.3.6 Aerostar Basket Specifications

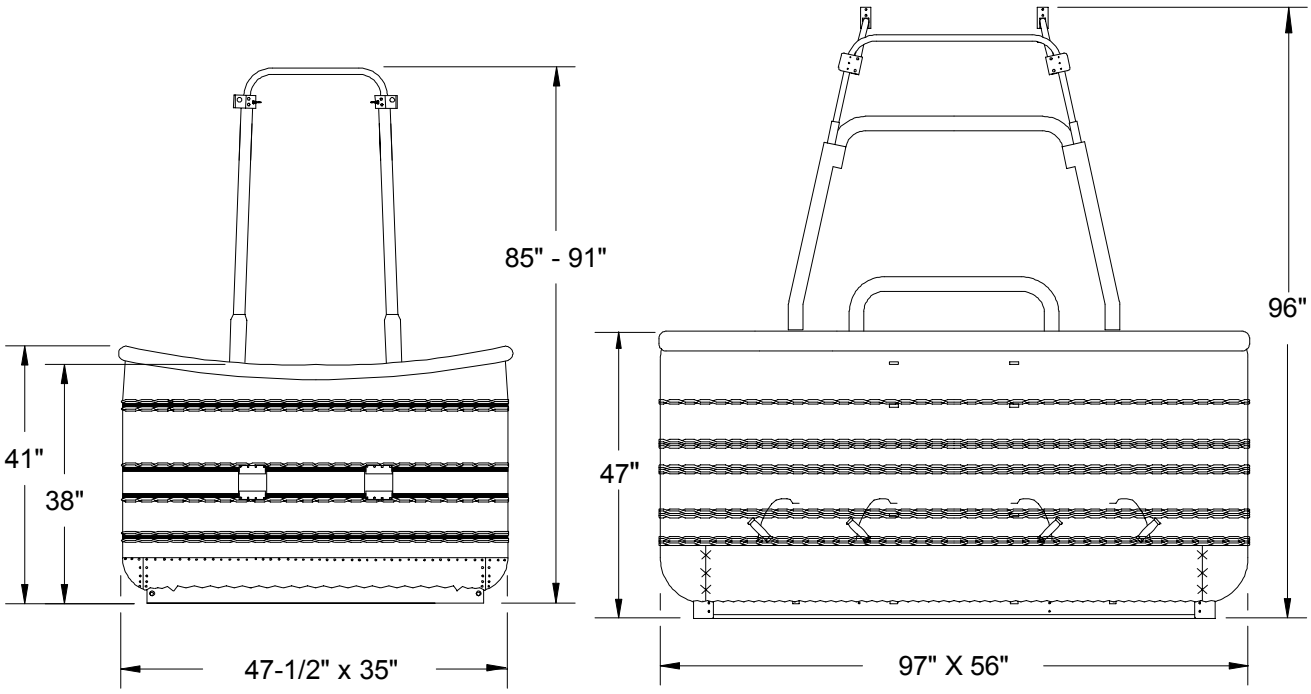

AURORA STRETCH (ELSS)

Average Weight with Basket, Aluminum Superstructure, Single Burner, one 25-Gallon Stainless Steel Tank, Fuel Hoses and Instruments. 182 lbs.

Added Weight For;

2/15 Gallon (in place of 1/25)	26 lbs.
Padded Uprights	3 lbs.
Scuff Pad	5 lbs.
Padded Leather Seat	7 lbs.
Stainless Steel Superstructure	13 lbs.

CLASSIC XII (RB12)

Average Weight with Basket, “Zone Five Burner”, Three 23.5-Gallon Stainless Steel Tanks, Fuel Hoses and Instruments. 700 lbs.

Added Weight For;

15 Gallon Tank Kit w/Straps and Hoses	45 lbs.
Triple Burner and Hoses	21 lbs.

Figure 1.3.7 Aerostar Basket Specifications

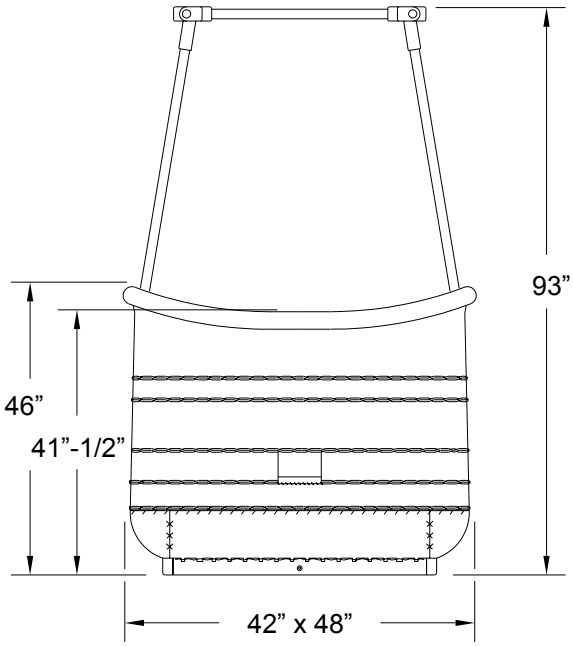

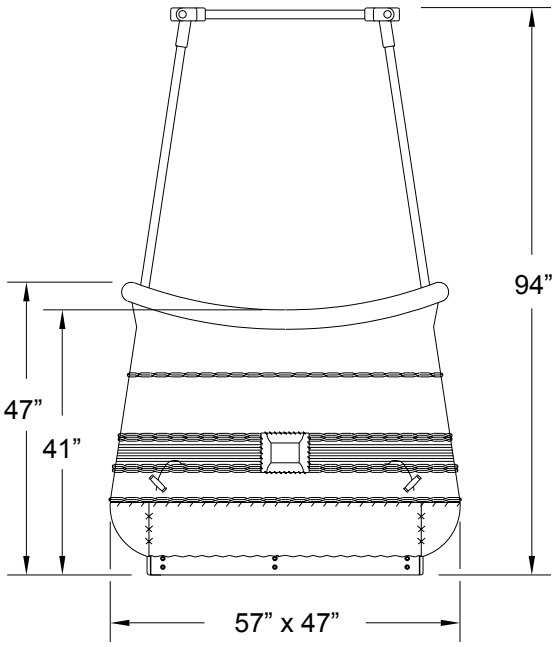

CLASSIC II AFX (RWSW-AFX)

Average Weight with Basket, Single Burner, Two 15-Gallon Stainless Steel Tanks, Fuel Hoses and Instruments. 247 lbs.

Added Weight For;

20 Gallon Tank w/Straps and Hoses	48 lbs.
Two 18-Gallon Tanks (replace 2/15’s)	3 lbs.
HP3D Double Burner with Hoses	18 lbs.
Padded Leather Seat	15 lbs.

CLASSIC LIMITED AFX (CW-AFX)

Average Weight with Basket, Single Burner, Two 20-Gallon Stainless Steel Tanks, Fuel Hoses and Instruments. 225 lbs.

Added Weight For;

HP3D Double Burner with Hoses	18 lbs.
Padded Leather Seat	15 lbs.

Figure 1.3.8 Aerostar Basket Specifications

2.0 PREVENTIVE MAINTENANCE

The holder of a private pilot or commercial pilot certificate may perform preventive maintenance on any aircraft that he/she owns or operates that is not used in air carrier service. A logbook entry must be made that the aircraft is returned to service after conducting preventive maintenance. This entry must be made in accordance with FAR Part 43 (see Appendix A.)

WARNING

All replacement parts installed in Aerostar/Raven hot air balloons must be FAA approved parts (with the exception of instrument batteries). Failure to comply with this requirement will render the aircraft UNAIRWORTHY, and may result in severe damage, injury or death.

The following items may be considered preventive maintenance:

(1) Removing dust, soot and debris from basket and/or burner that does not require disassembly of any basket primary structure or burner assembly components.

(2) Removing dirt and debris from hook and pile fastener tape.

(3) Moistening or applying protective materials to basket wicker. Also refinishing or applying protective material to decorative furnishings of the basket such as leather upholstery which does not require disassembly of any primary structure or interfere with the integrity of the fuel system.

(4) Patching small holes in the envelope, within allowable damage limits, utilizing approved methods and materials. See section 2.1 item (1).
Patching holes or tears in the envelope skirt or dipper regardless of size, utilizing approved methods and materials. See Section 2.1 item (9).

(5) Replacing prefabricated fuel hoses. This constitutes only complete hose assemblies generally with POL or CGA-555 fitting type connectors and/or (JIC) flare fittings, not involving disassembly and re-assembly of threaded pipe fittings.

(6) Replacing or cleaning spark plugs or electrodes on electric ignition system. Piezo-electric igniter cleaning and adjustment are considered applicable here (See Figure 2.3).

(7) Replacing small standard parts, where disassembly of primary structures or components is not required in order to replace the part, such as quick release pins, instrument batteries, fuel line hand turn POL O-rings, external envelope handling lines and 4-pt burner block adjustment. Also, tightening nuts and bolts on the superstructure and burner frame.

(8) Installation of or removal of gondola seats designed for use with 20 and 25-gallon horizontal fuel cylinders, where disassembly of primary structures or components is not required for the installation or removal.

(9) Lubricating quick release pins, Spring Top™ torsion springs and vent or deflation system pulleys. TRI-FLOW lubricant recommended.

(10) Interchanging balloon baskets, burners and cables that are specifically designed for quick removal and installation, when such removal/installation can be accomplished by the pilot; provided that baskets are interchanged as listed in the Flight Manual for that envelope. (See Section 1-3 of the aircraft flight manual)

(11) Cleaning and inspection of the envelope suspension cables, also the removal and installation of prefabricated suspension cables.

(12) Horizontal and vertical rattan repairs using approved materials and not requiring skid or floor disassembly or removal. Repairs not to exceed 8 adjacent horizontal or vertical reeds or combination thereof, except at skid line where repairs may not exceed 4 adjacent reeds.

Most repairs and maintenance are NOT considered preventive maintenance and must therefore be accomplished by authorized personnel at a FAA certified Repair Facility. The following are examples of repairs or maintenance that MUST be performed by a FAA certified Repair Facility:

(1) Burner maintenance requiring ANY valve or component disassembly. Other than normal fuel hose removal or attachment, any repair/replacement to the burner plumbing cannot be construed as owner/operator-authorized preventive maintenance.

(2) Fuel cylinder valve maintenance requiring valve or component disassembly.

(3) ANY envelope repairs other than those outlined in paragraph 2.1.

(4) Repair or replacement of basket skids, weaving frame or basket floor. Repair of wicker exceeding 8 adjacent horizontal or vertical rows or combination thereof, or repair of more than 4 vertical rows of wicker at skid line, constitutes a sizable weaving repair and cannot be construed as preventative maintenance.

(5) Repairs to, or replacement of aluminum or stainless steel basket frame. Replacement of any connector fittings other than 4-pt burner blocks. (Pre-assembled frames designed for quick disassembly and re-assembly are excluded here).

The following sections concern inspection and preventive maintenance for which the owner or operator of the balloon is primarily responsible. If the owner/operator uncovers any damage outside the allowable damage limits, those repairs MUST be made only by authorized repair personnel at a qualified Repair Facility, prior to further flight.

2.1 ENVELOPE

BEFORE EACH FLIGHT, inspect envelope for general integrity, noting particularly:

(1) Fabric - check for tears, holes, abrasions. If the tears or holes do not exceed the following damage criteria, the envelope may be flown, but should be repaired as soon as practical:

TABLE 6-1
ALLOWABLE DAMAGE LIMITATIONS

LOCATION	AGE OF ENVELOPE	
	*	**
Above 1st horizontal band below equator:	1 in.	3/8 in.
Below 1st horizontal band below equator and above 6 feet from mouth:	2 in.	1 in.
Within 6 feet above mouth:	18 in.	12 in.
Envelope Skirt or Dipper ***	no more than 10%	no more than 10%

* Balloons with less than 100 hours AND less than 3 years old with 250 tell-tale unturned.
** All other balloons
*** Damage may not exceed more than 10% of the skirt area.

Repairs may be accomplished by the owner/operator in either a temporary or permanent basis using the methods described below. The differentiation between temporary and permanent are as follows:

(a) Any repair smaller than 2 in. (or smaller based on the "Allowable Damage Limitations Table") in maximum damage dimension may be repaired with any adhesive method described below (for the applicable type of fabric) and be considered permanent as long as the patch remains well adhered.

(b) Any adhesive applied repair for greater than a 2 in. maximum damage dimension (but still eligible for temporary repair per the "Allowable Damage Limitations Table") is considered temporary until stitching is applied around the perimeter of the patch per method 4 of Section 6.1 of this manual.

(c) Any patch that is to be considered permanent must be from fabric which is of the same type (or alternate shown below) as the fabric being repaired. Other FAA approved Nylon hot air balloon fabrics may be used to make temporary repairs. (Nylon and Polyester fabric yarns posses different characteristics and will stretch or elongate in different manners, therefore Polyester fabric must not be used for any type of repair.) To convert to permanent, that repair must be re-done at the next annual or sooner with the appropriate fabric. Alternate fabrics that may remain as permanent are as follows:

Damaged Fabric Type	Acceptable Alternate Fabric
Aerostar Square Weave	Aerostar Diamond Aeromax (not adhesive repair)
Aerostar Diamond	Aeromax (not adhesive repair)
Aeromax	Aerostar Diamond; Partial and Full Panel Replacements only
Aerolite	Aeromax Soarcoat

The following envelope repair methods may be performed as preventive maintenance.

Method 1 For repairs on Standard Aerostar Fabrics:

Standard Aerostar fabric with an adhesive backing may be used for repairs and accomplished by a repairman or owner/operator where the damage does not exceed the maximum allowable damage limits as listed in table 6-1. This type of repair cannot be used on AeroMax or AeroLite fabric. ". Any damage outside the allowable damage limits must be repaired by a certified repairman.

Steps:

1. Clean exterior of damaged area so it is free of dirt or dust.
2. Cut a patch 1" larger than the tear or hole in all directions.
3. Align weave of the patch with that of the area being repaired.
4. Remove paper backing and adhere patch in place.

Note

A smaller adhesive backed piece may be placed over the damage from the inside if any adhesive is exposed through the damaged area

Method 2 For repairs on standard Aerostar fabrics:

A contact adhesive/balloon fabric repair may be accomplished by an owner/operator where the damage does not exceed the "allowable damage limits". Any damage outside the allowable damage limits must be repaired by a certified repairman.

Steps:

1. Clean exterior of damage area so it is free of dirt or dust.
2. Cut a patch of material which is a minimum of 1" beyond edges of tear or hole in each direction.
3. Apply contact adhesive to the coated side of the patch and the area to be repaired on the outside. Allow to set as specified on adhesive instructions.
4. Align weave of the patch with that of the area being repaired and adhere patch in place.

Note

Adhesive such as "Tru-Bond" or "Formica Adhesive" or other contact type adhesives may be used (consult MFR's limitations) to determine that the cement's solvent does not attack nylon. Clean excess adhesive from around edges of patch and patched area on inside of balloon and allow patch to cure several hours before storage or use.

Note

A smaller adhesive backed piece may be placed over the damage from the inside if any adhesive is exposed through the damaged area

Method 3 For repairs on Aeromax and Aerolite fabrics:

Silicone adhesive/balloon fabric repairs may be accomplished by an owner/operator where the damage does not exceed the "allowable damage limits" listed in Method 1. Any damage outside the allowable damage limits must be repaired by a certified repairman.

Note

This type of repair is the only “adhesive repair" which will work on AeroMax and AeroLite materials.

Steps:

1. Clean exterior of damage area so it is free of dirt or dust.
2. Cut a patch of material which is a minimum of 1" beyond edges of tear or hole in each direction.
3. Apply silicone adhesive/sealant liberally to a coated side of the patch.
4. Align weave of the patch with that of the area being repaired and adhere patch in place.

Note

Clean excess silicone from around edges of patch on inside of balloon and allow to cure several hours before storage or use.

Note

A smaller adhesive backed piece may be placed over the damage from the inside if any adhesive is exposed through the damaged area

(2) Temperature tell-tales - check maximum service temperature. If the 275 °F tab has turned black, the envelope fabric must be tested by authorized repair personnel in accordance with a Appendix II-A (fabric testing) before further flight.

(3) Stitching - check for broken or abraded stitching or seam separation.

(4) Webbings - check for cuts, abrasions, or burns.

(5) Envelope suspension system.

No damage is allowable within the primary suspension system, including the apex ring, vertical load tapes, webbing terminations, base fittings, rapid links, suspension cables, carabiners and/or A-block fittings. No field repair is authorized.

Steel Cables - Check for no broken wires. This may be done by running the cables through a soft cloth or cloth gloves slowly and feeling for sharp spots that may snag indicating a broken wire. Cables should be free of discoloration, rust, corrosion, and areas where kinks appear. In addition, there must not be areas with permanent blackening or bluing which indicates that the cable may have been overheated and weakened. Cables attached with rapid links are owner/ operator replaceable.

Kevlar™ Cables - Check for no damage to outer covering of the cables. If the Kevlar™ core (yellow) is exposed or the covering is heat damaged to the extent that the cable is no longer flexible and easily bent, the cable must be replaced with new parts obtained from the factory. Inspect the whip wrap at splice for no broken threads, heat damage or abrasion. Check thimble for proper orientation, distortion or deformation. If cable shows any of the above conditions, it must be replaced or returned to Aerostar for evaluation and/or repairs. Kevlar suspension cables are owner/operator replaceable.

6) Maneuvering vent and deflation lines (where applicable) -Check for no abrasions or burns, check cable for no broken wires or corrosion, check for no twisted or misrouted lines. With the balloon inflated, there should be a minimum of 5 feet of slack line.

Note

To measure line slack, attach end of line to load block with balloon inflated, pull line from envelope just taut and grasp to load block end. The slack loop thus formed should measure not less than 5 feet total (2 1/2' each leg), or should hang to just slightly above the basket handrail, for Rip-top, Spring-top and Parachute top deflation systems. The slack loop formed should measure not less than 10 feet total (5' each leg) for Aerochute deflation systems.
If the specified minimum of slack is not present in the above lines, the Repair Station must be notified and the lines corrected during the next Annual/100 hour inspection.

(7) Anchor points for deflation panel lines and vent line anchors (where applicable) - check for no fabric tears, broken stitching or abrasions.

(8) Deflation Systems should be checked as follows:

Rip-top and Para-rip top:
Hook and pile fastener tape in Rip-top and Para-rip top deflation panels should be checked for adequate adhesion, remove all debris and foreign matter. Check for no damage due to wear or deterioration caused by excessive heat. To check that the hook and pile fastener tape provides adequate hold:

(a) Perform the following Velcro tests near the connection of the deflation line, perform a second test approximately half way between the pull out point and the end of the deflation panel.

(b) Mate the fastener tapes firmly by hand for 15" to 20" along the panel circumference.

(c) Grasp the fabric with both hands approximately 12" from the fastened tape on each side of the mated portion.

(d) Apply a pull of approximately 20 pounds across the fastened tape. (NOTE: A 20-pound pull may be estimated by comparing a pull on a spring scale.) If the fastener tapes separate, they are unacceptable for flight and will require additional testing or replacement by a qualified Repair Station.

Spring Top:
Check torsion spring and retainer pockets to ensure pocket integrity, i.e. stitching intact and springs seated in retainer pockets. Springs require lubrication if the spring action is sticky or if the springs do not return to a flat condition. If a pocket shows excessive deformation or wear, that pocket must be replaced by an authorized Repair Facility. Recommended spring lubricants are TRI-FLOW brand or other Teflon based spray lubricants.

Parachute and Aerochute:
Check to ensure that the parachute or Aerochute top fits properly in its deflation port. If the top fits properly, the top will be fairly well centered in the deflation port and will form an airtight seal around the perimeter of the deflation port. If the top cap is sealed properly, it will display a visible and distinct outline of the edge of the deflation port behind the top cap fabric. A blurred outline of the deflation port edge indicates a poor seal. Notify the inspector at the time of Annual/100 hour inspection if the deflation panel has not been sealing properly or if fuel consumption has been abnormally high.

(9) Tears, burns, or other damage to the envelope skirts and/or dippers regardless of size may be repaired by the owner/operator as preventive maintenance. The repair MUST be performed using approved methods and materials. Repair methods 1 and 2 shown in item (1) of this section may be used for small damage repairs.

For the repair of larger damage the following method may be used. This method may be used for skirt repairs only regardless of the size of damage.

Steps:

1. Cut a patch of material which is a minimum of 1½" beyond edges of tear or hole in each direction.

2. Align weave of the patch with that of the area being repaired.

3. Fold a hem and stitch over damaged area using type E polyester thread, a type 301 lock-stitch, seam type (LSb-1) using a single needle with a stitch size of 7-15 stitches per inch. An edge distance of 3/16" ± 1/16" MUST be maintained. See figure 2.1(9) for sewing details.

4. The damage behind this type of repair may be trimmed out and an additional row of stitching sewn around the damaged area to better secure the repair. Maintain the edge distance of 3/16” ± 1/16”.

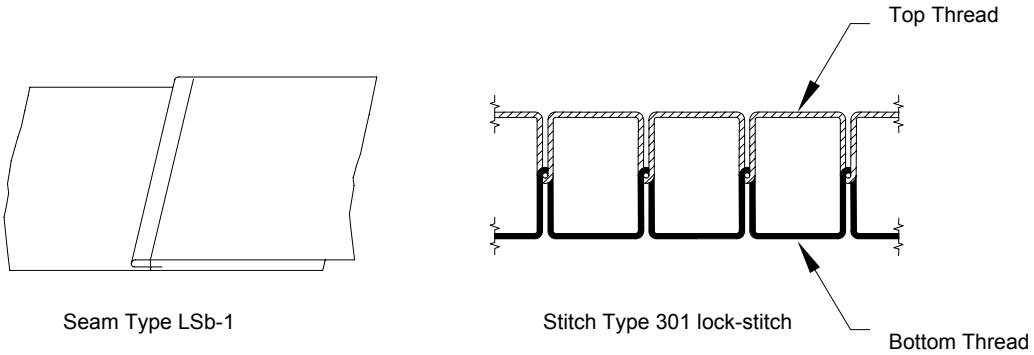

Figure 2.1 (9)
Skirt Repair Sewing Details

NOTE

For areas of larger damage or damage in multiple skirt panels it is recommended the repairs be performed by a certified repair facility. These repairs should be accomplished using the partial or full panel replacement techniques found in Part II section 6.1.2 of the ACAI manual.

2.2 INSTRUMENTS

Check each instrument to verify proper calibration.

Variometer:
Check to insure that the needle points to zero while sitting on the ground.

Altimeter:
Obtain a current barometric pressure reading and adjust the altimeter display or kohlsman window to the proper setting. Compare the adjusted altitude reading to the known field elevation. If there is a variance of more than 200 feet between the known field elevation and the altitude displayed, contact an Approved Repair Facility for the needed repairs.

Pyrometer:
Obtain a current ambient temperature and compare to ambient temperature reading on pyrometer (if applicable). Calculate the buoyancy temperature taking in to account field elevation, ambient temperature and gross weight. Compare calculated temperature to actual temperature shown on pyrometer display. If ambient or envelope temperature reading are more than 20 degrees higher or lower than the known or calculated temperature, contact an Approved Repair Facility to test and/or repair the pyrometer assembly.

2.3 BURNER

BEFORE EACH FLIGHT, inspect burner for general integrity and operation, noting particularly:

(1) Visually inspect for no loose or missing nuts and bolts.

(2) Burner blast valves - check for proper valve opening and closing by actuating the valve handle or trigger. The valve should shut off when it is returned to the closed position. The valve handle or trigger should move smoothly with no sticky or stiff action.

Dirt or debris between the curved surface of the valve handle and the nylon blast valve washer may prevent the handle from moving smoothly. Wipe away the dirt or debris from the valve handle with a dry cloth. DO NOT use solvent because the solvent could contact the valve stem O-ring and damage the O-ring.

(3) Metering valve - check for proper operation.

(4) Pilot light valve - check for proper operation.

(5) Pilot light - check for proper operation.

(6) Electric blast valve (if equipped) - check for proper operation, inspect power cable for no damage or loose connections, verify that the battery is charged.

(7) Electric ignition or piezo - check that the electric sparker ignites the pilot light when activated, check the gap on the sparker electrode (see Figure 2.3). Inspect the power cables for no damage or loose connections, verify that the battery is charged (if applicable).

(8) Any questionable burner operations must be referred to an authorized Repair Station.

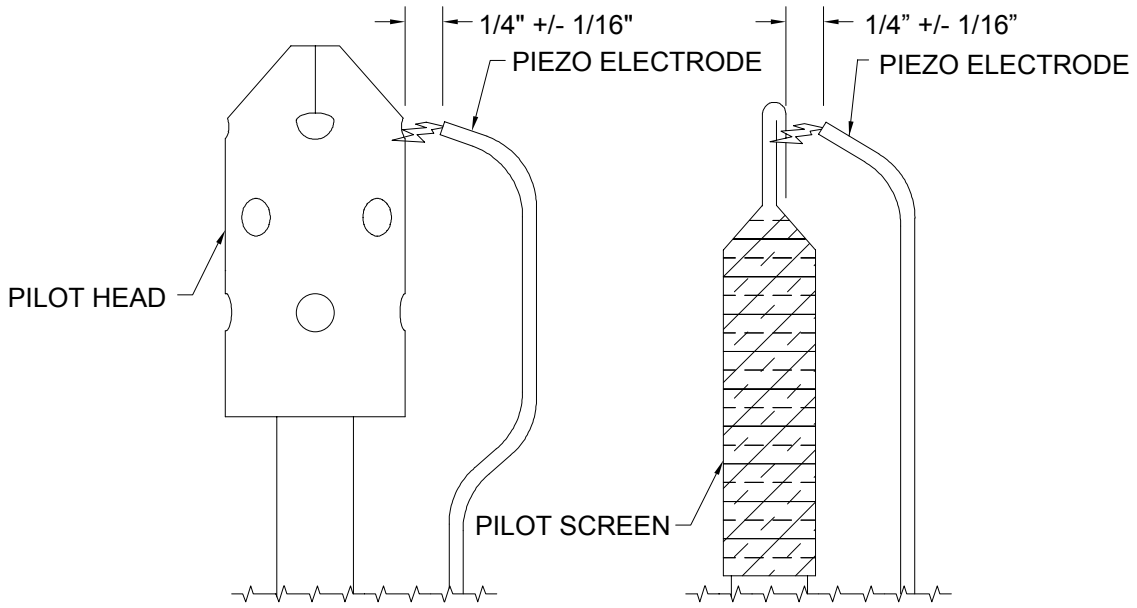

Figure 2.3 Adjustment of Piezo Electrode

2.4 BASKET (GONDOLA)

BEFORE EACH FLIGHT, inspect basket for general integrity noting particularly:

(1) Bolts and nuts - check for no damaged threads, bent bolts, and proper tightness.

(2) Quick pins - check for proper operation and locking capability, no bent pins or pins with the head loose from the shank. If necessary, lubricate with spray silicone or light oil.

(3) Fire extinguisher - check the gauge to see that the extinguisher is properly charged. Check that the nozzle is unobstructed. Keep the fire extinguisher clean. Be familiar with the operating instructions, cautions and maintenance instructions on the fire extinguisher nameplate.

Note

EVERY SIX YEARS the fire extinguisher must be discharged and then recharged by an authorized fire extinguisher service company.
EVERY TWO MONTHS the extinguisher should be removed from its mounts and inverted several times to prevent the dry agent from caking.

(4) Fuel tanks - Perform visual and sniff tests to inspect for no leaks, defective valves or actuated pressure relief valves. Perform visual inspection for tank structural integrity including no dents, bulges or gouges.

(5) Fuel hoses - Carefully inspect for no damaged or chafed hoses. If the outer covering of the hose is chafed exposing the inner steel braid, replace the hose. **USE ONLY AEROSTAR MANUFACTURED HOSES FOR REPLACEMENT.**

Note

Keep hoses tied back from metal edges that might abrade the hose during transportation or use. Insure that tank orientation and valve position is such that hoses are not excessively bent or kinked at a sharp angle or twisted. Note that with the AFX basket option, fuel hoses are to be routed out the side opening of vertical tank collars to prevent kinking in transport.

(6) Open and close fuel tank valves. To open, turn valve handle until stop is felt. To close, turn the valve handle until the seat is felt, then tighten gently.

CAUTION

Overtightening of the valve on closure can damage the seat and cause leakage, necessitating repair or replacement of the valve.

2.5 STORAGE

DO NOT store the envelope inside the basket. This may permanently deform the wicker or break the wicker uprights where they pass through or by the floor and/or skids.

Store the balloon system in a manner that protects it from weathering elements. Keep out of direct sunlight and exposure to heat.

WARNING

NEVER store fuel tanks containing propane or propane vapor in garages or enclosed buildings where sources of ignition are present or where no ventilation is available. Propane must not be stored in structures where people reside. Instead, remove the tanks from the system and store the tanks outdoors.

Propane vapors are heavier than air. Even if there is a very slight leak, vapors will build up inside baskets, low spots or in enclosed areas. A tiny leak can provide enough fuel for a large explosion if left overnight.

Fuel tanks that have been pressurized using nitrogen should never be stored in temperatures greater than 30°F higher than the temperature at which they were originally pressurized. In long term storage, the tank's vapor should be purged into open space for several minutes to allow the nitrogen to escape.

DO NOT store the envelope if wet. Wet fabric is susceptible to color bleeding and mildew discoloration or degradation. Dry the envelope before storing by re-inflating or by simply filling with cold air. Load webbings take somewhat longer to dry than the envelope fabric itself.

Note

Experience has shown that long term storage of an envelope is sometimes detrimental to the lifetime of the coating. It is recommended that the envelope be occasionally unpacked and, if possible inflated, prior to placing back in storage. Store in cool, dry conditions whenever possible.

To keep the wicker from becoming brittle, remoisten it every two to three months. Remove the instruments and keep the leather dry when doing this. To help the wicker retain moisture, apply a silicone solution to it after moistening. Non-flammable wicker treatments such as Armor-All® brand may be used.

To preserve and protect the suede leather used on the basket, occasionally use a commercial product sold in most shoe stores that is intended for this purpose. Use a brush to remove dirt and grime. Scuff marks may be removed by lightly sanding.

Use shoe oil to extend the life of the leather scuff protectors used in some baskets. Apply liberally.

(Intentionally left Blank)

INTERNATIONAL, INC.

AEROSTAR CONTINUED AIRWORTHINESS INSTRUCTIONS
SECTION 3.0

AIRWORTHINESS LIMITATIONS

This Airworthiness Limitations section of the Aerostar Continued Airworthiness Instructions (ACAI), is applicable to all models of hot air balloons manufactured by Aerostar Intl., Inc. (Raven) under Federal Aviation Administration (FAA) Type Certificate A15CE, and/or components thereof that are maintained in accordance with the ACAI and using Aerostar Intl., Inc. original replacement parts.

Any Aerostar (Raven) balloon system or a component that is repaired or altered using a method or technique not in accordance with the Aerostar (Raven) FAA approved type design or using methods not found in the ACAI manual, the alternate method or technique must be FAA approved. A person or facility who formulates and prepares an alternate repair or alteration to the aircraft is responsible for the structural integrity of the repair technique and is responsible for establishing the Airworthiness Limitations including the future inspection and testing criteria for the repair or alteration.

Non-Aerostar replacement parts that are installed for the repair or alteration of an Aerostar (Raven) component must be FAA approved and be accompanied by the proper part certification. The supplier of the non-Aerostar part is responsible for the airworthiness of the part and must establish supplemental information to the ACAI including the Airworthiness Limitations for their part(s), i.e. mandatory inspections, life limits and testing criteria.

In accordance with Federal Aviation Regulations 14CFR:

§ 31 Appendix A A31.4 "The Airworthiness Limitations Section is FAA approved and specifies maintenance required under §§43.16 and 91.403 of the Federal Aviation Regulations."

§ 43.16 states: "Each person performing an inspection or other maintenance specified in an Airworthiness Limitations section of a manufacturer's maintenance manual or Instructions for Continued Airworthiness shall perform the inspections or other maintenance in accordance with that section, or in accordance with operations specifications approved by the Administrator under Parts 121,123, 127, or 135 or an inspection program approved under §91.409(e)."

The FAA approval applies to section 3.0 and the following Appendices.

Appendixes II-A, II-E and II-G.

Rev.Ltr.	Paragraphs	Pages	Approved By	Date
Original	All	All	Greg Michalik	2/15/01
A	- Chart 300 Chart 302	3-1 3-3 3-9	Greg Michalik	3/01/01
B	All	All	Greg Michalik	10/25/01

Chart 301
Envelope Airworthiness Limitations

Component / Applicability	Life Limit and Damage Limitation	Remarks
Envelope Airframe / All models of envelopes manufactured by Aerostar Int'l., (Raven) under Type certificate A15CE.	Replacement of envelope fabric is limited to a one time replacement of up to an accumulated total of 65% of the original fabric at the time of manufacture, except for minor patches and repairs.	*Experience has shown that structural integrity of the envelope can be maintained by replacing no more than 65% of envelope fabric.* *Reference section 6.1.2 of the ACAI. It is recommended that anyone performing a major fabric repair to the envelope, contact the Aerostar factory to obtain information pertinent to the model being repaired.*
Envelope Fabric After Possible Overheating / All models of envelopes manufactured by Aerostar Int'l., (Raven) under Type certificate A15CE.	If a preflight check or scheduled inspection reveals that the 275°F dot on the "tell-tale" tab (fabric over-temp indicator) in the top cap has turned black, the fabric must be tested per the ACAI Appendix II-A, Paragraph II-A.1.1, before further flight.	*Reference Aircraft Flight Manual Section 2.26*
Envelope Fabrics / All models of envelopes manufactured by Aerostar Int'l., (Raven) under Type certificate A15CE, and all types of Aerostar fabrics, (i.e. square weave, Aerostar diamond weave, Aerolite, Aeromax).	All fabrics **(except those specified below) must be tested at intervals of 100 hours time in service (TIS) or 12 calendar months, whichever expires first, to the requirements for the 100 hour inspection criteria per Appendix II-A, Paragraph II-A.1.1. or Must be tested at intervals of 50 hours TIS or 12 calendar months, whichever expires first, perform structural test//re-test per Appendix II-A Paragraph II-A.1.1. **less that 2 years old, less than 150 hours TIS, no presence of mold or mildew or no increased fuel consumption.	The owner/operator or inspector has the option o fusing either of the following test criteria and associated test intervals: (a) the 100 hour testing criteria of 45 lbs. tensile, less than 50 cubic feet per minute (cfm) of porosity, or tear strength equal to or greater than 2.5 lbs. (b) the 50 hour testing criteria of 35 lbs. tensile, equal to or greater than 50 cfm porosity or tear strength less than 2.5 lbs. (see Appendix II-A Paragraph II-A.1.1 for exact criteria)

Chart 301
Envelope Airworthiness Limitations
(continued)

Component / Applicability	Life Limit and Damage Limitation	Remarks
Envelope Fabric / All models of envelopes manufactured by Aerostar Int'l., (Raven) under Type certificate A15CE.	If a preflight check or scheduled inspection reveals that fabric damage is present, the damage must be compared to allowable damage limits, before further flight, to determine airworthiness. If damage exceeds limits, repair prior to further flight. Allowable Damage Limitations For fabric with less than 100 hours and less that 3 years old: • Above 1ST horizontal band below the equator: 1 inch. • Below 1ST horizontal band and above 6 feet above mouth: 2 inches. • Envelope within 6 feet of mouth: 18 inches For fabric with greater than 100 hours and greater than 3 years old: • Above 1ST horizontal band below the equator: 3/8 inch. • Below 1ST horizontal band and above 6 feet above mouth: 1 inches. • Envelope within 6 feet of mouth: 12 inches Envelope skirt or Dipper: no more than 10%.	*Aerostar recommends that all small damage be repaired as preventive maintenance or at Annual/100 hour inspections irrespective of allowable damage limitations as listed.* *Reference section 5.1.2 of the ACAI.*
Envelope Webbing / 1inch, 1 ½ inch nylon and Kevlar webbing used in all envelopes manufactured by Aerostar Int'l., (Raven) under Type certificate A15CE.	If a preflight check or scheduled inspection reveals that webbing damage exceeds a total of ¼ inch in any 12 inch section, webbing must be repaired prior to further flight.	*Some envelope models may be manufactured with the webbing located on the inside of the envelope.* *Reference section 5.1.3 of the ACAI.*

Chart 301
Envelope Airworthiness Limitations
(continued)

Component / Applicability	Life Limit and Damage Limitation	Remarks
Steel Suspension Cables / Galvanized and Stainless Steel suspension cables used on all models of envelopes manufactured by Aerostar Int'l., (Raven) under Type certificate A15CE.	If a preflight check or scheduled inspection reveals that cables have broken wires, corrosion, severe kinks or areas of blackening or bluing that may indicate overheating or weakening, cables must be replaced prior to further flight.	*Reference section 5.1.4 of the ACAI.*
Kevlar Suspension Cables / Kevlar suspension cables used on all models of envelopes manufactured by Aerostar Int'l., (Raven) under Type certificate A15CE.	If a preflight check or scheduled inspection reveals that Kevlar cables have internal Kevlar exposed, outer braid is not flexible, or eye splice whip wraps have broken threads, cable must be replaced prior to further flight.	*Reference section 5.1.4 of the ACAI.*
Kevlar Suspension Cables / Kevlar suspension cables used on all models of envelopes manufactured by Aerostar Int'l., (Raven) under Type certificate A15CE.	Cables MUST be tested and re-qualified at an interval not to exceed 10 years (120 calendar months) or 500 hours in service whichever expires first. Subsequent testing is required every 5 years (60 calendar months) or 250 hours thereafter whichever expires first.	*Remove cables and return to the Aerostar factory or another facility, which the FAA has specifically approved for testing, requalification, and return to service of the Kevlar suspension cables.* *Reference section 5.1.6 of the ACAI.*
Envelope suspension fittings/ All 2-point and 4-point suspension fittings used on envelopes manufactured by Aerostar Int'l., (Raven) under Type certificate A15CE.	If a preflight or scheduled inspection reveals that the fitting is bent, broken, or cracked, the fitting must be replaced prior to further flight.	*Reference section 5.1.6 of the ACAI.*

Chart 301
Envelope Airworthiness Limitations
(continued)

Component / Applicability	Life Limit and Damage Limitation	Remarks
Carabiner envelope connectors / Carabiners used on envelopes manufactured by Aerostar Int'l., (Raven) under Type certificate A15CE.	If a preflight or scheduled inspection reveals that the carabiner is broken, bent, or the spring gate does not close and lock completely, the carabiner must be replaced prior to further flight.	*Reference section 5.1.7 of the ACAI.*
Rip top and Pararip top deflation panel/ All envelopes using a Velcro rip panel as a deflation device manufactured by Aerostar Int'l., (Raven) under Type certificate A15CE.	If a preflight or scheduled inspection reveals that there is not a minimum of 2" excess material in the deflation panel between each vertical load tape on the S-series envelopes and a minimum of 3" on the Rally (RX) series envelopes, the deflation panels must be repaired or replaced prior to further flight.	*See Service Bulletin #115* *Reference section 5.1.8 of the ACAI.*
Hook and pile fastener tape used in deflation panels / All envelope models that are equipped with a Rip top or Pararip top deflation system manufactured by Aerostar Int'l., (Raven) under Type certificate A15CE.	If a preflight check or scheduled inspection reveals that the fastener tape does not meet the minimum strength requirements (30 lbs. average) as specified in the ACAI Appendix II-G Paragraph II-G.1, the fastener tape must be replaced prior to further flight.	*Fastener tape MUST pass the required tests for continued airworthiness. Fastener tape that fails MUST be replaced by a FAA certified maintenance facility.* *See Service Bulletin #112* *Reference Appendix II-G, and section 5.1.9 of the ACAI.*
Deflation system pulleys and torsion springs / All envelopes manufactured by Aerostar Int'l., (Raven) under Type certificate A15CE.	At intervals not to exceed 100 hours or 12 calendar months, whichever expires first, the pulleys and torsion springs must be lubricated.	*Reference section 5.1.11 of the ACAI.*

Chart 301
Envelope Airworthiness Limitations
(continued)

Component / Applicability	Life Limit and Damage Limitation	Remarks
Deflation-Venting systems / Rip top, Pararip top, Spring top, Parachute top, Aerochute top deflation systems and accessories used in all envelopes manufactured by Aerostar Int'l., (Raven) under Type certificate A15CE.	If a preflight or scheduled inspection reveals that: • The deflation panel does not fit or seal properly in the port opening, • The control lines, cables, or straps are damaged beyond the specified limitations (see remarks section), • The deflation system does not function properly, the deflation system must be repaired prior to further flight.	*Fabric and stitched at the guide ring MUST not be torn abraded or broken. The 3/32 inch cable (if used) MUST not have any broken wires, severe kinks, or be rusted.* *The pull-out strap may not have more than 20% of its fibers in a 12 inch section damaged by abrasion, cuts, or burns.* *Reference sections 5.1.10, 5.1.11, 5.1.12, 5.1.13, 5.1.14 of the ACAI.*

Chart 302
Burner Assemblies Airworthiness Limitations

Component / Applicability	Life Limit and Damage Limitation	Remarks
Blast valve / Servicing of Rego valves 7553S, 7553T, Sherwood valve LV440 on all burner assemblies manufactured by Aerostar Int'l., (Raven) under Type certificate A15CE.	At intervals not to exceed 100 hours or 12 calendar months, whichever expires first, the burner blast valve(s) must be disassembled, cleaned, and inspected for damage or scoring to the interior bonnet wall that may cause the valve to leak. If the bonnet is damaged, a new bonnet assembly must be installed. A new blast valve O-ring and copper gasket must be installed. The blast valve O-ring and copper gasket must be lubricated with a light application of Krytox grease. The blast valve(s) must be tested to insure that the valve is free of leaks, operates smoothly, and shuts off completely.	*DO NOT interchange parts between Rego and Sherwood valve assemblies. The only parts that can be used in either valve assembly are the blast valve assembly is the blast valve O-ring, copper gasket, and the Teflon spacer ring.* *Triggers on HP3 burners must have 1/16" to 1/8" of free play.* *See Service Bulletins #102 and #118.* *Reference sections 5.2.2, 5.5.3, 5.2.4 of the ACAI.*
Metering valve(s) / Nupro and Hoke style valves on all burner assemblies manufactured by Aerostar Int'l., (Raven) under Type certificate A15CE.	If a preflight check on scheduled inspection reveals that the metering valve leaks, does not operate smoothly, or does not shut off completely, the valve must be repaired or replaced prior to further flight.	*Reference section 5.2.5 of the ACAI.*
Liquid pilot light assemblies / All HP2 update and all HP3 burners manufactured by Aerostar Int'l., (Raven) under Type certificate A15CE.	At intervals not to exceed 100 hours or 12 calendar months, whichever expires first, the pilot light vapor converter must be removed, cleaned, lubricated, reassembled, and tested for proper operation. The pilot light orifice must be inspected to insure that it is not obstructed. Replace if needed.	*Apply only a very thin film of Krytox grease to lubricate the vapor converter O-rings.* *Reference section 5.2.6 of the ACAI.*
All pilot light assemblies/ All burners manufactured by Aerostar Int'l., (Raven) under Type certificate A15CE.	If a preflight check or scheduled inspection reveals that the pilot light valve leaks or binds during operation of the valve, the valve must be repaired or replace prior to further flight. If the pilot light does not stay lit or does not operate with a steady flame, the pilot light must be serviced prior to further flight.	*The pilot light flame must burn mostly blue with yellow tips.* *Reference sections 5.2.7 & 5.2.8 of the ACAI.*

Chart 302
Envelope Airworthiness Limitations
(continued)

Component / Applicability	Life Limit and Damage Limitation	Remarks
All Nupro valves B-4JNAR2, B-4JAR2 for vapor and/or liquid control / All burner assemblies manufactured by Aerostar Int'l., (Raven) under Type certificate A15CE.	If a preflight or scheduled inspection reveals that the packing nut is loose, the packing nut must be tightened in a clockwise direction to a torque value of 60 in. lbs. or 5 ft. lbs.	*Important: Torque values of greater than 60 in. lbs. may make the valve difficult to operate.* *Reference section 5.2.9 of the ACAI.*
All burner assemblies manufactured by Aerostar Int'l., (Raven) under Type certificate A15CE.	If a preflight check or scheduled inspection reveals that any of the following operations of the burner is malfunctioning, the burner must be repaired prior to further flight. • Burner fittings including internal plumbing, no leaks present. • The pressure gauge(s) must operate properly and be easily read by the operator. • The burner must ignite easily from the pilot light(s) and have proper flame alignment. • Gimbal burners must move freely without binding and return to center when released. • Electric blast controls, valves, and fittings must be free from leaks and shut off completely.	*Reference section 5.2.10 of the ACAI.* *See Service Bulletin #113. Reference section 5.2.11 of the ACAI.* *Reference section 5.2.12 of the ACAI.* *See Service Bulletin #131 for HPIII Burners. Reference section 5.2.13 of the ACAI.* *See Service Bulletin #110. Reference section 5.2.14 of the ACAI.*

Chart 303
Fuel System Airworthiness Limitations

Component / Applicability	Life Limit and Damage Limitation	Remarks
All Fuel Cylinders/ Certified for use in Aerostar Int'l., (Raven) hot air balloon systems manufactured under Type certificate A15CE. Tank models: V10 V15 V18 V23 H20 H25	At intervals not to exceed 100 hours or 12 calendar months, whichever expires first, fuel cylinders MUST be inspected for the following: • To insure that there are no leaks at: o all welded seams. o around all tank fittings, valves, or plugs. • To insure that there are(is): o no digs, dents, gouges, or bulges (beyond specified limits found in Appendix E). o no evidence of heat or fire damage. • To insure that all valves: o operate properly (no binding). o are free from leaks and shut off completely. • To insure that vapor regulators (if installed): o provide the needed fuel flow for proper pilot light operation. o do not leak. • To insure that fuel gauges(s): o operate properly & do not leak. o are easily read by the operator. o four retaining screws are checked for tightness.	*See Service Bulletin #135.* *See Service Letter #104.* *Reference sections 5.3.1, 5.3.2, 5.3.4, 5.3.5, and appendix II-E of the ACAI.*
All Fuel Cylinders/ Certified for use in Aerostar Int'l., (Raven) hot air balloon systems manufactured under Type certificate A15CE. Tank models: V10 V15 V18 V23 H20 H25	At an interval not to exceed 144 calendar months from the original date of tank manufacture, each fuel cylinder must be inspected and re-qualified. Subsequent inspections and re-qualification must be performed at intervals not to exceed 144 calendar months based on the type of re-qualification method used.	*Cylinders must be inspected in accordance with Appendix II-E of the ACAI.* *Reference section 5.3.1 para. (c) and Appendix II-E of the ACAI.*

Chart 303
Fuel System Airworthiness Limitations
(continued)

Component / Applicability	Life Limit and Damage Limitation	Remarks
All Nupro valves B-4JNAR2, B-4JAR2, B-JR2 for vapor and/or liquid control / Fuel cylinder assemblies manufactured by Aerostar Int'l., (Raven) under Type certificate A15CE.	If a preflight check or scheduled inspection reveals that the packing nut is loose, the packing nut must be tightened in a clockwise direction to a torque value of 60 in. lbs. or 5 ft. lbs.	*Important: torque values of greater than 60 in. lbs. may make the valve difficult to operate.* *Reference section 5.3.3, of the ACAI.*
All fuel hoses and fittings / Certified for use in Aerostar Int'l., (Raven) hot air balloon systems manufactured under Type certificate A15CE.	At intervals not to exceed 120 calendar months from the date of manufacture, new fuel hoses must be installed. At intervals not to exceed 100 hours or 12 calendar months whichever expires first, fuel hoses MUST be leak tested by submersing the fuel hose in water and pressurizing the hose to a minimum of 120 psi.	*See Service Bulletins #120 & #132* *Reference sections 5.3.6, and 5.3.7 of the ACAI.*
Pressure relief safety valves installed in 10 gallon aluminum fuel cylinders / Certified for use in Aerostar Int'l., (Raven) hot air balloon systems manufactured under Type certificate A15CE.	At an interval not to exceed 60 calendar months a new pressure relief safety valve (Aerostar P/N 52435), must be installed. If a preflight check or scheduled inspection reveals evidence of leaks or signs of discharge, a new pressure relief safety valve must be installed.	*Instructions for the replacement of the pressure relief safety valve on 10 gallon cylinders can be found in section 6.3.9 of the ACAI manual.* *Reference section 5.3.9 of the ACAI.*

Chart 304
Gondola Airworthiness Limitations

Component / Applicability	Life Limit and Damage Limitation	Remarks
Rattan / All woven rattan gondolas manufactured by Aerostar Int'l., (Raven) under Type certificate A15CE. Models: ELS, ELSS, RW, RWS, RWSW, CW, CWS, CW-AFX, RSWS-AFX, TW-1, TW-2, RB5, RB6, RB8, RB12	If a preflight check or scheduled inspection reveals damage to the rattan greater than 4 inches in diameter or within 18 inches of another damaged area, that damage must be repaired prior to further flight.	*See Service Bulletin #117.* *Reference section 5.4.1 of the ACAI.*
Plywood floors / All plywood floors used in gondolas manufactured by Aerostar Int'l., (Raven) under Type certificate A15CE. Models: ELS, ELSS, RW, RWS, RWSW, CW, CWS, CW-AFX, RSWS-AFX, TW-1, TW-2, RB5, RB6, RB8, RB12	If a preflight check or scheduled inspection reveals damage to the plywood floor (i.e. damage due to decay, delamination, impact, or punctures), or other damage that might affect the strength, the floor must be repaired or replaced prior to further flight.	*See Service Bulletin #107.* *Reference section 5.4.2 of the ACAI.*
Tank straps and moorings / Used in all models of gondolas manufactured by Aerostar Int'l., (Raven) under Type certificate A15CE.	If a preflight check or scheduled inspection reveals damage to a tank strap that exceed 20% of the cross section of the webbing, the tank strap must be replace prior to further flight.	*See Service Bulletins #101 & #128.* *Reference section 5.4.3 of the ACAI.*

Chart 304
Gondola Airworthiness Limitations
(continued)

Component / Applicability	Life Limit and Damage Limitation	Remarks
Gondola hardware / Used in all models of gondolas manufactured by Aerostar Int'l., (Raven) under Type certificate A15CE.	If a preflight check or scheduled inspection reveals that there is damage to any of the following hardware used in the gondola, the defective part must be replaced prior to further flight. Quick Pins: The pin must not be bent, must have both ball bearings at the tip of the pin, the head must not turn independently from the shank. Wirelock Pins: The pin must not be bent; the spring gate must require some effort to snap into place when installed. Misc. Bolts and Locknuts: Bolts must not be bent, cross-threaded, stripped, or show signs of metal fatigue or stress. Locknuts must not be cross-threaded or stripped and must require more than 8 in. lbs. of torque to be loosed.	*Reference section 5.4.9, of the ACAI.*
Skids / Used on gondolas manufactured by Aerostar Int'l., (Raven) under Type certificate A15CE. Models: ELS, ELSS, RW, RWS, RWSW, CW, CWS, CW-AFX, RSWS-AFX, TW-1, TW-2, RB5, RB6, RB8, RB12	If a preflight check or scheduled inspection reveals that a skid is: • not securely fastened, • damaged from decay and/or serious cracks that will effect the strength and/or function of the skid, • worn to the point of abrasion of the skid hardware, the skid must be repaired or replaced prior to further flight.	*See Service Letter #106.* *Reference section 5.4.10, of the ACAI.*

Chart 304
Gondola Airworthiness Limitations
(continued)

Component / Applicability	Life Limit and Damage Limitation	Remarks
Aluminum and stainless steel tubing / All models of gondolas manufactured by Aerostar Int'l., (Raven) under Type certificate A15CE.	If a preflight check or scheduled inspection reveals that the tubing is damaged, the tube must be replace prior to further flight. Aluminum Tubing: • No uncontrolled localized bends. • No uncontrolled gradual bends. • No signs of cracking, kinking, buckling, collapse, or localized overstress. • No signs of corrosion, scratches, gouges, deeper than 1/32". Stainless Steel Tubing: • No uncontrolled localized bends. • No uncontrolled gradual bends greater than 5°. • If quick pin holes exceed 0.215", keeper tabs must be used or the quick pin replaced with an aircraft bolt and locknut. • Quick pin hole diameter does not exceed 0.220".	*TW Gondolas; See Service Bulletin #122* *See Service Letter #109* *Reference sections 5.4.11, 5.4.12, 5.4.13, 5.4.14, 5.4.18 of the ACAI.*
Lower frame superstructure interface/ Used on the following gondolas manufactured by Aerostar Int'l., (Raven) under Type certificate A15CE. Models: RWS RWSW CW CWS TW	At intervals not to exceed 100 hours or 12 calendar months, whichever expires first, the aluminum interface pin must be removed and inspected to insure that: • the pin is not bent. • there are no dents or gouges deeper than 1/32" deep. • if quick pin holes exceed 0.215", keeper tabs must be used or the quick pin replaced with an aircraft bolt and locknut. • quick pin hole diameter does not exceed 0.220".	*Reference section 5.4.13 of the ACAI.*

Chart 304
Gondola Airworthiness Limitations
(continued)

Component / Applicability	Life Limit and Damage Limitation	Remarks
Lower frame superstructure interface/ Used on the following gondolas manufactured by Aerostar Int'l., (Raven) under Type certificate A15CE. Models: ELS ELSS	At intervals not to exceed 100 hours or 12 calendar months, whichever expires first, the oversleeve connector must be removed and inspected to insure that: • the oversleeve is not bent. • there are no dents, digs, or gouges deeper than 1/32". • the spring pin holes do not exceed a diameter of 0.295".	*Reference section 5.4.13 of the ACAI.*
Lower frame superstructure interface/ Used on the following gondolas manufactured by Aerostar Int'l., (Raven) under Type certificate A15CE. Models: RB5 RB6 RB8 RB12	At intervals not to exceed 100 hours or 12 calendar months, whichever expires first, the oversleeve connector and interface pin must be inspected to insure that: • the oversleeve and/or aluminum interface pin is not bent. • there are no dents, digs, or gouges deeper than 1/32" in either the oversleeve or interface pin. • the spring pin holes in the oversleeve or interface pin do not exceed a diameter of 0.295".	*Reference section 5.4.13 of the ACAI.*

Superstructure /
 	
All models of gondolas manufactured by Aerostar Int'l., (Raven) under Type certificate A15CE.
	At intervals not to exceed 100 hours or 12 calendar months, whichever expires first, the superstructure assemblies must be inspected for:
	• Overall symmetry, security, and uniform position.
	• Interface connection hole diameter not in excess of:
	  ○ 0.220" for models CW, CWS, RWS, RWS, RWSW, and TW.
	  ○ 0.295" for models ELS, ELSS, RB5, RB6, RB8, RB12.
	
	At intervals not to exceed 100 hours or 12 calendar months, whichever expires first, all aluminum superstructure assemblies must have the envelope load blocks lowered and the tubing area under the block inspected for:
	• bends, cracks, or other minor damage in excess of 1/32" deep.
	• Bolt hole diameter in excess of 0.220".
		TW Gondolas; See Service Bulletin #122
		
		See Service Letter #109
		
		Reference sections 5.4.11, 5.4.12, 5.4.13, 5.4.14, 5.4.18 of the ACAI.

Chart 304
Gondola Airworthiness Limitations
(continued)

Component / Applicability	Life Limit and Damage Limitation	Remarks
All AFX gondolas manufactured by Aerostar Int'l., (Raven) under Type certificate A15CE. Models: CW-AFX RWSW-AFX	At intervals not to exceed 100 hours or 12 calendar months, whichever expires first, the: • AFX burner frame must be disassembled and inspected to insure that the o bolt holes in either the frame tubes or load blocks do not exceed a diameter of 0.220". o AFX load fittings are not bent, cracked, or have other damage deeper than 1/32". o AFX load block lugs interior is not worn beyond a minimum thickness of 0.160". • Lower AFX rod sockets must be inspected to insure that: o the socket tube is not bent. o The socket tube is free of dents, digs, gouges, or scratches deeper than 1/32". • The AFX support cables must be inspected to insure that they are free of: o rust and corrosion. o broken wire strands. • The polycarbonate rods must be inspected to insure that they are free of: o nicks, scoring, and gouges. o bends or signs of heat damage.	*See Service Letter #112* *Reference section 5.4.19 of the ACAI.*
Mode G Gondola manufactured by Aerostar Int'l., (Raven) under Type certificate A15CE.	If a preflight check or scheduled inspection reveals that the square aluminum tubing is cracked, broken, or has weld failures, the tubing must be replaced	*See Service Bulletin #106* *Reference section 5.4.20 of the ACAI*

4.0 INSPECTION AFTER ABNORMAL STRESSES

NOTE

This section includes ANY incidents that may have caused shock loading, impact damage, unusual stress concentrations, or hidden structural damage. This would include hard impact landings vertically, or high speed impact landings horizontally, or both, as well as many other kinds of incidents.

Whether in transportation, in flight, anchored to the ground. (tether or launch restraint), hard contact with the ground, any objects attached to or growing out of the ground, as well as any other airborne objects can cause this kind of damage. Launch restraint or tether in high wind speeds or gusty wind conditions can cause twisting or oscillations which may cause damage. If the balloon has experienced a hard landing, a high wind tether incident, a windy launch restraint shock loading or any similar high-stress or concentrated-loading circumstance, the following checks MUST be performed BEFORE the next flight.

Procedures beyond the owner/operator-authorized Preventative Maintenance defined in Part I must be carried out by authorized personnel only at a certified Repair Station using Aerostar and FAA approved materials. Appropriate logbook entries are to be completed to return the aircraft to service.

4.1 ENVELOPE

4.1.1 Fabric

(1) Check for no tears, holes or abrasions. Pay particular attention to the portion of the envelope that contacted the uprights or hit the ground during the incident.

(2) Check for burns or melted holes on any portion of the envelope fabric that may have touched hot metal burner parts.

Note

See Section 2.1 for allowable fabric damage limits and repair procedures.

4.1.2 Webbings

Check for burns on any portion of the envelope load webbings that may have touched hot metal burner parts during, or immediately after, the hard landing.

4.1.3 Suspension Cables

Steel Cables - Check for broken strands. This may be done by running the cables through a soft cloth or cloth gloves slowly and feeling for sharp spots that may snag indicating a broken wire. Cables should also be checked for discoloration, rust, blackening or bluing, and areas where kinks appear. This indicates that the cable may have been overheated and weakened.

Kevlar ™ Cables - Check for damage to outer covering on the cable. If the Kevlar ™ core (yellow) is exposed or the covering is heat damaged to the extent that the cable is no longer flexible and easily bent, the cable must be replaced with new parts obtained from the factory. Inspect the whip wrap at splice for broken threads, heat damage or abrasion. Check stainless steel thimble for partial rotation, distortion or deformation. If cable shows any signs of the above conditions, owner/operator must remove and return to Aerostar for testing, evaluation and repair / replacement as indicated.

4.2 BURNER AND FUEL SYSTEM

4.2.1 Burner And Connections

(1) Check for distorted, bent or otherwise damaged components. Replace as necessary (by a Repair Station).

(2) Turn fuel on. Perform leak checks and operational checks.

4.2.2 Fuel Tanks and Tank Straps

(1) Check all fasteners, webbings, buckles, etc., for abrasion, cuts, wear or breakage.

(2) Visually inspect after each incident. DO NOT USE a cylinder that leaks, is bulged, dented, has defective valves or safety devices, bears evidence of physical abuse, fire or heat damage, detrimental rusting or corrosion UNTIL it has been properly repaired and inspected.

4.3 BASKET

4.3.1 Aluminum or Stainless Steel Tubing

(1) Check for distorted or bent section.

(2) Check all quick pin and bolt holes for cracks.

4.3.2 Superstructure Connections

(1) Check tube connector fitting and tubing for cracks around bolt and QR pin holes.

(2) Check aluminum interface pins for bends or cracks.

(3) Check extruded connector fittings for cracks or deformation.

(4) Check load fittings for bends or cracks.

4.3.3 Plywood Floors

Check for breakage. Broken floors must be replaced by Repair Station.

4.3.4 Oak Skid

Check for breakage or cracks. Broken skids must be replaced by Repair Station.

4.3.5 Burner Support Block

Inspect for slippage.

4.3.6 Quick Release Pins

(1) Check for bent pins or pins with the head loose from the shank.

(2) Check for proper operation

(3) Replace if damaged.

4.3.7 Rattan (Does not apply for Model G)

Check for holes and/or broken rattan. Inspect to insure that there are no areas with vertical or horizontal damage greater than 4 inches or within 18 inches of other damage. Inspect to insure that there is no damaged wicker at skid line in excess of 2 adjacent vertical canes, repairs must be performed by an appropriately rated repair facility.

4.3.8 Leather Scuff Protector

Check for loose leather, tears or abrasion holes that would leave the wicker unprotected.

4.3.9 Aluminum Square Perimeter Tubing (Model G only)

Check for cracks, breaks, weld failures.

4.3.10 Fiberglass Liners and Panels (Model G only)

Check for holes and cracks.

4.3.11 Optional AFX Baskets (Model CW and RWSW only)

(1) Remove Support Rods and inspect for breaks, fractures or bending. SYSTEM MUST NOT BE FLOWN WITH DAMAGED OR MISSING SUPPORT RODS.

(2) Rods may be replaced by owner/operator ONLY WITH APPROVED PARTS OBTAINED FROM THE FACTORY.

(2) Check top frame and corner load fittings for bends, cracks or distortion.

(3) Check bolts, nuts, and bolt holes for damage.